PERFECT
Version 3.0

A computer simulation model of

Productivity Erosion Runoff Functions to Evaluate Conservation Techniques

---

M. Littleboy, D.M. Freebairn, D.M. Silburn

Queensland Department of Natural Resources

D.R. Woodruff and G.L. Hammer

Queensland Department of Primary Industries

October 1999

Foreword

The climate of the subtropical field crop region of Queensland and northern New South Wales is one of overlapping influences from the summer rainfall system of the tropics and the winter rainfall system of the temperate zone. It is a climate where average conditions mean little and averages rarely occur. It is, in reality, a probabilistic mix of the two climatic systems with some evidence for negatively correlated annual periodicities of separate influences.

The field crop agriculture which has evolved reflects this in its unique diversity and flexibility, in its production of winter and summer cereals, coarse grains, oilseeds, grain legumes and fodder crops; and in the complexity of crop sequence and intervening fallow strategies. It is an agriculture which can, in different years, display the principles and practices of either temperate or tropical agriculture or of most possible intermediate combinations. Diversity is beneficial in buffering against market and weather dynamics. It is a major obstacle to improving the productivity of a system as a whole.

Mention of the region automatically creates in most minds, an image of self mulching cracking clay soils - the Darling Downs black earths. These were the earliest and now the most intensively developed soils of the region, but there is in fact enormous soil variation, extending to gradational earths and hard setting texture contrast soils. Many of these variants have to be accommodated by manipulative technologies for physical conditioning, chemical fertility and erosion control.

Departmental scientists have long recognised the complexity of this agriculture and the importance of interactions between its many system components. They have until recently been forced to conduct research on components in the reductionist mode, and to synthesise changes to farming systems by intuition and feel. They have been obliged to draw inference from short term experience conscious of its superficiality in the face of long term variability.

Nowhere has this shortcoming in technical capability been more keenly felt than be those who wrestle with the control of soil erosion, knowing always that conservation and production objectives must be achieved concurrently. The issue became sharply focussed in the mid 1970s when reduced tillage-stubble retention concepts began to gain momentum. Fortunately, this coincided with the burgeoning of computing technology and a state of knowledge of agricultural system processes that were sufficient to initiate simulations and economic analyses of crop production, runoff and soil loss in a systems framework.

PERFECT had its origins at that time. It came from a need to make long term predictions that could not be derived any other way. Such questions as - 'Can reduced tillage achieve soil stabilisation economically in the long term? Will it merely slow down the rate of land degradation and be overridden by coincidence of episodic crop failures and intense erosion events?' The derivation of PERFECT has grown with the subsequent growth in computing capabilities, the knowledge of driving processes, and the ability to synthesise and analyse systems.

The result is a very comprehensive modelling environment, which, because it can cope with the climatic and soil diversity of the region, and its complex crop and fallow sequences, has a very wide national and international utility. Whether one is seeking probabilistic interpretations of the effects of management strategies on crop yields, soil erosion or both, PERFECT has those capacities. Importantly, it is designed to evolve by modular update so that knowledge advances in process science and be component simulations can be incorporated. The creators of PERFECT are to be congratulated. Their organisation, QDPI, has acquired a very real responsibility to ensure that PERFECT evolves and is sustained, just as PERFECT seeks to assist the sustainability of our subtropical agriculture and soil resources it uses.

Dr J.K. Leslie

1989

Table of Contents

FOREWORD 2

ACKNOWLEDGMENTS 5

DISCLAIMER 5

1.0 INTRODUCTION 6

1.1 Genesis of PERFECT 6

1.2 Overview of PERFECT 7

1.3 Underlying assumptions 8

1.4 Strengths and weaknesses of PERFECT 9

1.5 Order of calculations 10

1.6 Changes since Version 1.0 10
Water balance: 10
Erosion: 10
Surface residue: 11
Crop growth: 11
Input/Output: 11
Management: 11
Coding: 11

2.0 WATER BALANCE 12

2.1 Runoff 12

2.2 Soil evaporation 15

2.3 Soil water redistribution and deep drainage 16

2.4 Infiltration 17

3.0 CROP GROWTH MODELS 18

3.1 Crop factor model 18

3.2 Generic crop model 19

3.3 Dynamic crop model - wheat 22

3.4 Dynamic crop model - sunflower 26

3.5 Crop death due to extreme water stress 28

4.0 RESIDUE AND TILLAGE 29

5.0 SOIL EROSION **31**

6.0 PADDOCK MANAGEMENT **33**

6.1 Cropping selection **33**

6.2 Tillage operations **34**

6.3 In-Crop Irrigation **34**

6.4 Updating soil water **34**

6.5 User defined management options **34**

7.0 RUNNING PERFECT **35**

7.1 Data requirements of PERFECT **35**

7.2 Data sources **36**
7.2.1 Weather data 36
7.2.2 Soil parameters 36

REFERENCES **40**

APPENDIX A DESCRIPTION OF MODEL INPUT FILES **45**

A.1 Control file **45**

A.2 Weather data **45**

A.3 Soil parameters **45**

A.4 Manager parameters **46**

A.5 Crop parameters - crop factor model **48**

A.6 Crop parameters - generic crop model **48**

A.7 Crop parameters - dynamic wheat model **49**

A.8 Crop parameters - dynamic sunflower model **50**

A.9 Management sequence **51**

A.10 Initial values **51**

Summary output (perfect.out) **52**

Manager output (manager.out) **52**

Codes file (codes.txt) **52**

Comma separated values files **52**

Acknowledgments

PERFECT includes contributions from many individuals. Apart from the original authors (Mark Littleboy, David Freebairn, Mark Silburn, David Woodruff and Graeme Hammer, many other scientists have made valuable contributions. These include (in alphabetical order) Chris Carroll, Lex Cogle, Ted Gardner, Steve Glanville, Paul Lawrence, Rob Loch, Kerry Rosenthal, Mark Sallaway and Don Yule. K.P.C. Rao and S.T. Srinivasan from the International Crops Research Institute for the Semi-Arid Tropics (Hyderabad, India) were involved in the adaption of PERFECT for Indian farming systems.

PERFECT was initially funded by the Queensland Department of Primary Industries Director-General New Initiatives scheme from 1983 to 1986. From 1987 to 1989 the National Soil Conservation Program provided substantial funding to finalise development and the subsequent documentation of PERFECT. From 1990 until 1992, the Land and Water Resources Research and Development Corporation (LWRRDC) provided funding for ongoing model validation. Since 1992, the continuing maintenance and development of PERFECT has continued largely due to the support and sustenance from the Queensland Department of Natural Resources. In Australia, PERFECT has been applied in numerous projects funded by the National Landcare Program, LWRRDC, Australian Centre for International Agricultural Research, and the Murray-Darling Basin Commission. These projects have justified the ongoing maintenance and support of PERFECT.

Disclaimer

No undertaking is made on the part of the State in relation to the performance or results produced by the software. Without limiting the generality of the foregoing, the State does not warrant, guarantee or make any representations whatsoever regarding the correctness, accuracy, reliability, friendliness, currency or any other aspect in relation to characteristics or use of the software. Sole responsibility and risk associated with the use and the results of the software irrespective of the purpose to which such use or results are applied is accepted by the user. Where the user supplies results or information arising from or out of the software to any third person, the user agrees to indemnify the State against any claim arising from such results or information. Any other warranty expressed or implied by statute or otherwise is, to the extent allowed by law, excluded from this agreement.

1.0 Introduction

PERFECT (Productivity, Erosion and Runoff Functions to Evaluate Conservation Techniques) is a biophysical model that simulates the plant-soil-water-management dynamics in an agricultural system. It was developed to simulate the major effects of management and environment and to predict runoff, soil loss, soil water, drainage, crop growth and yield. Similar emphasis is given to land degradation and crop production aspects. PERFECT is designed as a cropping systems model in that it simulates both crop and fallow phases through time. A user can simulate different cropping systems and fallow management options by selecting from a library of crop types and tillage implements.

PERFECT uses daily weather inputs and simulates the water balance (runoff, soil evaporation, transpiration, soil water storage, redistribution and deep drainage), crop growth (leaf area development, biomass accumulation phenology and yield), soil erosion and surface crop residue. In Version 3.0, plant growth for wheat and sunflower can predicted using fully dynamic crop models, while a choice of two less complex but generic crop growth models can be used to estimate water use and yield for any plant or community.

This document provides information describing the changes to the PERFECT model that have occurred since Version 1.00 was originally released in 1989. The publication "PERFECT, A computer simulation model of Productivity Erosion Runoff Functions to Evaluate Conservation Techniques" (Littleboy *et al.* 1989) provides users with a description of Version 1.00. A number of different versions of PERFECT have been developed over the years. These are:

Version 0.0 Developed as part of a Queensland Government New Initiative Project. Described in Freebairn *et al*. (1986) but never formally released.

Version 1.0 Developed with funding from the National Soil Conservation Program and the Land and Water Resources Research and Development Corporation. Documented in Littleboy *et al*. (1989, reprinted 1993) and formally released in 1989.

Version 2.0 Version 1.0 with some changes, including the inclusion of a new generic crop model. Released in October 1996.

Version 3.0 The current version described in this manual is a condensed form of Version 2.0. All source code has been completely reengineered, and input/output files have been redesigned to facilitate use of the model. Released in 1999.

The term “PERFECT” refers to the scientific code of the model. PERFECT can be used as a stand-alone MS-DOS program or the model can be accessed using a software interface called PERFED (also referred to as PERFECT-ED). The versions of PERFED have also reflected the development of PERFECT. The most recent version (PERFED Version 3.0) is a Windows-based interface that links to PERFECT Version 3.00.

1.1 Genesis of PERFECT

The need to assemble a multi-disciplinary group to study cereal cropping systems through the application of simulation models was identified by Queensland Department of Primary Industries (QDPI) in 1980 resulting in the development of PERFECT. The objective of this multi-disciplinary group was to develop and validate models of erosion and productivity to study production and degradation aspects of cereal cropping systems. A major benefit of this group was the convergence of crop models developed and validated by the QDPI Agriculture Branch and the water balance and erosion models developed and validated by the QDPI Soil Conservation Research Branch. Initially, an existing model for wheat growth (later described in Hammer *et al.* 1987) was integrated with a range of water balance and erosion submodels. This stage of the development of PERFECT was described by Freebairn *et al*. (1986). The development of

PERFECT was finalised from 1986 to 1989. During these years, PERFECT became a cropping systems model with a substantial number of new components including crop growth submodels for sunflower and sorghum, crop residue and surface cover submodels, a wider range of erosion submodels, an in-crop nutrient balance submodel, and planting and tillage decision submodels.

PERFECT was developed to simulate the major effects of management (cropping system and tillage) and environment (climate and soil type) and to predict runoff, soil loss, soil water, drainage, crop growth and yield. The development of PERFECT involved:

- incorporating crop growth submodels for wheat and sunflower into PERFECT;
- including hydrology and erosion relationships developed from experimental data collected from small agricultural catchments and rainfall simulators in Queensland;
- adapting components from published models such as CREAMS and EPIC;
- including planting and tillage submodels to determine the timing of planting and tillage operations as a function of rainfall, time of year and soil moisture; and
- integrating these components into a framework that simulates both crop and fallow phases of a cropping system.

1.2 Overview of PERFECT

PERFECT contains submodels that simulate soil water balance, crop growth, soil erosion, crop residue and crop cover (Figure 1.1).

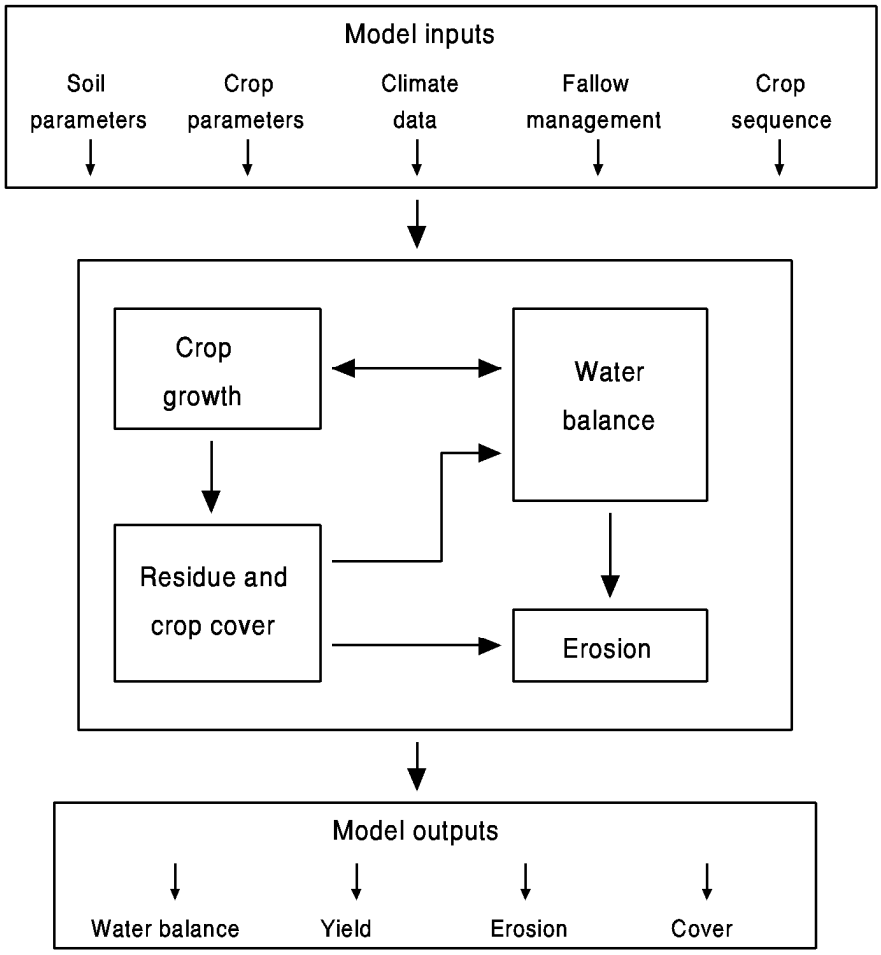

Figure 1.1 Internal structure and feedback flows of PERFECT

Model simulation is performed on a daily timestep. Runoff is calculated as a function of daily rainfall, soil water deficit, surface residue, crop cover and surface roughness. Soil water is updated on a daily basis by any rainfall exceeding the daily runoff volume. For a dry soil profile, infiltration can optionally enter lower soil profile layers using a soil cracking algorithm. Infiltration is partitioned into the soil profile from the surface, filling subsequent layers to total porosity. When a soil profile layer is above its defined field capacity, soil water redistribution occurs but only if the layer immediately below can hold the water. Redistribution from the lowest profile layer is assumed lost to the system as deep drainage. Downward movement of water by either infiltration from the soil surface or by soil water redistribution can be limited by the saturated hydraulic conductivity of individual soil layers.

Water can be lost from the soil profile as transpiration and soil evaporation. Transpiration is represented as a function of pan evaporation, leaf area and soil moisture. It is removed from the profile according to the current depth and distribution of roots. Transpiration can only dry a profile layer to its defined wilting point. Soil evaporation is based on a two stage evaporation algorithm. After infiltration has occurred, it is assumed that drying occurs at potential rate up to a user defined limit. After this limit is reached, the second and slower stage of soil evaporation commences. Evaporation will remove soil water from the two upper profile layers and drying continues below wilting point to the user specified air dry limit. The sum of transpiration and soil evaporation can never exceed pan evaporation on any day.

Soil erosion is estimated on days of runoff using an Modified USLE based function that expresses soil erosion as a function of runoff volume, cover, soil erodibility, management practice and topography.

Wheat and sunflower growth are estimated using dynamic crop growth models. These models predict crop phenology, leaf area and dry matter using functions of transpiration, transpiration efficiency, potential evaporation, intercepted radiation, radiation use efficiency, daily temperature and photoperiod. Growth is reduced due to water or temperature stress. Crop yield is related to total dry matter and plant water use around flowering. The two additional and more generic crop growth models in PERFECT permit the simulation of any crop but require more detailed user inputs.

A daily balance of crop residue weight on the surface is maintained. At harvest, above-ground crop dry matter is added to crop residue. During the fallow, residue is decayed or incorporated by tillage. Decay and residue incorporation by tillage is related to residue type and tillage implement. Percent cover is estimated from residue weight on a daily basis. Tillage affects both the weight of crop residue and surface roughness.

Crop planting and tillage dates can either be input by the user or generated automatically subject to user defined planting or tillage criteria. For automatic planting, the user must define a range of criteria that defines crop type, a planting rainfall, minimum soil water content and the possible range of planting dates for the crop. A planting will occur when all criteria are satisfied. The automatic tillage model will perform the selected tillage operation based on accumulated rainfall.

1.3 Underlying assumptions

The major underlying assumptions of PERFECT are not unique to this model. There are a plethora of water balance models that share these assumptions.

The first major underlying assumption is that PERFECT is mechanistic in that the overall structure of the model is physically based but individual processes within the model may be empirical.

The second major underlying assumptions of PERFECT is that it is a daily timestep model. The choice of a daily timestep during model development was made because daily weather data are

more freely available than data at timesteps of less than one day (e.g. hourly data). Since all biophysical processes are simulated on a daily timestep some processes (e.g. event erosion) may be poorly predicted for some individual events. However, as shown in Littleboy *et al.* (1992a), long-term predictions can be acceptable.

The third major underlying assumptions is that PERFECT is a one-dimensional model in that it simulates a single point in a landscape without any consideration of lateral surface or subsurface flow of water. Therefore, it is generally only applicable for field-sized areas with homogeneous soils, topography and climate.

1.4 Strengths and weaknesses of PERFECT

The strengths of PERFECT are:

- This model is a cropping systems model that contains dynamic water balance, crop growth, soil erosion, fallow management and planting decision submodels in an integrated framework. Many crop growth models only simulate crop growth for a single growing season and ignore fallow periods. PERFECT can simulate sequences or rotations of different crops and fallow management practices for a wide range of cropping systems.

- Weather data requirements for PERFECT are readily obtainable. The minimum weather data set is daily rain and average monthly radiation, pan evaporation and temperature. In Australia, these data can be readily obtained from a range of sources.

- Soil parameters in PERFECT have a physical basis and can be measured or estimated using a range of techniques. Strategic field sampling of soil water, rainfall simulation and specific laboratory analyses are key tools to derive model inputs. A range of surrogate models to estimate input parameters from the more readily available soil survey data are also available.

- The model is capable of performing long-term simulations using historical daily rainfall data to permit the user to study the long-term variability in model outputs (e.g. water balance, erosion, and grain yield).

- PERFECT runs on all IBM compatible PC computers (even XTs). On newer machines, simulations are quick (e.g. less than 10 seconds for a 100 year simulation on a PENTIUM). Therefore, a user can quickly perform a large number of "what if" scenarios.

- Extensive validation has been performed and published in the scientific literature. This validation has been undertaken with data from seven locations, 17 soils and 45 farm-management options (e.g. different crops, tillage practices and fertiliser options). There has been over 420 experimental years of data used. In addition, using other datasets, there are numerous publications describing the validation of models that were later to become a submodel of PERFECT. Some examples of submodels of PERFECT that have been compared with field data include the CREAMS water balance model (Silburn and Freebairn 1992), various soil erosion models (Freebairn *et al*. 1989), the wheat submodel of PERFECT (Woodruff and Tonks 1983; Hammer *et al.* 1987) and the sunflower submodel of PERFECT (Hammer and Goyne 1982).

- PERFECT has been widely applied. There are a large number of published applications including defining erosion-productivity relationships (Littleboy *et al*. 1992b, 1996c, evaluating the effects of cropping systems on runoff, recharge, erosion and yield (Carroll *et al.* 1992; Hayman 1992; Abbs 1994; Hayman and Kneipp 1995; Abbs and Littleboy 1998) evaluating surface management options (Freebairn *et al.* 1991; Littleboy *et al*. 1996a; Cogle *et al*. 1996), evaluating the effects of crop and pasture rotations on runoff, erosion and recharge (Lawrence and Littleboy 1990), quantitative land evaluation (Grundy *et al*. 1992; Thomas *et al*. 1995; Littleboy *et al*. 1996d; Littleboy 1998), assessing risk of soil compaction (Littleboy *et*

al. 1998), estimating the hydrological effects of tree clearing (Williams *et al* .1997) and design of land-based effluent disposal systems (Gardner *et al.* 1995).

The weaknesses of PERFECT are:

- It is a one-dimensional model that simulates a single point in a landscape and does not consider partial area runoff processes or lateral movement of water. It is only applicable for field-sized areas with homogeneous soils, topography and climate.

- It is a daily timestep model in that all biophysical processes are simulated on a daily timestep. As a result, some processes that occur at a smaller timestep (e.g. peak runoff rate) may in some circumstances be poorly predicted. .

- It does not have a fully interactive management module (cf APSIM; McCown *et al*. 1996) to enable the user to trigger management decisions (e.g. planting, fertiliser, irrigation and tillage) from a range of biophysical criteria.

- Residue decay algorithm is non-dynamic in that it does not relate residue decay to water or temperature.

1.5 Order of calculations

For each day in the simulation, the following order of calculations is assumed:

- read daily weather data;
- determine if a management operation (planting, irrigation or tillage) will occur on this day;
- apply irrigation (if applicable);
- calculate infiltration into soil cracks;
- calculate surface runoff;
- calculate soil evaporation;
- calculate plant growth and water uptake;
- combine components of the water balance and update soil water;
- calculate profile drainage;
- undertake tillage (if applicable);
- calculate crop residue balance (decay and incorporation); and
- calculate soil erosion.

1.6 Changes since Version 1.0

This section lists the changes that have been made since the original release version of PERFECT (Version 1.0). Details of the actual changes made to the algorithms can be found in the relevant sections of this manual.

Water balance:

- added a generic curve number versus cover response (Section 2.1);
- added a generic curve number versus surface roughness response (Section 2.1);
- amended the equation to estimate the profile drainage factor (Equation 2.14);
- modified the effects of soil water on the runoff retention parameter (Equation 2.2);
- changed the infiltration via soil cracks algorithm to be more generic (Section 2.4);
- removed the EPIC and Boughton methods of calculating runoff;
- removed the exponential method for calculating profile drainage; and
- removed the estimation of peak runoff rate.

Erosion:

- removed the Onstad and Foster (1975) Modified USLE;
- removed the Williams (1976) Modified USLE;
- removed the Rose (1985) erosion model; and

- calculated the USLE LS factor using the algorithm from the Revised USLE (Renard *et al*. 1993) (Section 5.3).

Surface residue:
- removed the Silburn first approximation algorithm.

Crop growth:
- removed the SORKAM sorghum growth model (Rosenthal *et al*. 1989);
- added radiation limited growth, new yield prediction equation and new phenology equation to the wheat model (Section 3.3);
- replaced the original and simplistic LAI crop model with a generic crop growth model (Section 3.2);
- improved the ET:Pan crop factor model (Section 3.1); and
- allowed for crop death due to extreme water stress (Section 3.5).

Input/Output:
- redesigned all input and output files;
- all input files (except weather data) are free format;
- extended the number of variables that can be output;
- added the ability to output daily, monthly, crop, fallow, annual and average monthly in a spreadsheet compatible format;
- removed obsolete soil input parameters; and
- the user-defined soil water contents at air-dry, wilting point, field capacity and saturation are now expressed as absolute values instead of relative to wilting point.

Management:
- extended user control of planting and tillage operations; and
- included the option of automatic irrigation subject to soil water deficit.

Coding:
- all coding has been completely reengineered to much higher programming protocols; and
- all redundant code has been removed; total lines of code have decreased from almost 12000 (V2.0) to less than 5000 (V3.0).

2.0 Water balance

The water balance submodel calculates the volume of water in the soil on a daily time-step. It simulates a one-dimensional (vertical) water balance, averaged over a field sized area. PERFECT contains a water balance submodel that was developed from the concepts proposed by the Williams and La Seur (1976) runoff and soil water submodel and the Ritchie (1972) soil evaporation submodel (cf CREAMS, Knisel 1980). In PERFECT, interactions between crop residue, crop cover and surface roughness and components of the water balance are considered.

2.1 Runoff

The original Williams-Ritchie submodel calculates runoff as a function of rainfall and soil water deficit. In PERFECT, runoff depth is predicted using a modified form of the CREAMS curve number technique (Knisel 1980). Runoff is estimated using the following equation.

$$Q = \frac{(P - 0.2S)^2}{P + 0.8S} \qquad P>0.2S \quad (Q=0.0 \text{ if } P \leq 0.2S) \qquad 2.1$$

Q is runoff volume (mm)
S is the retention parameter
P is daily rainfall (mm)

The retention parameter *S* is analogous to the maximum potential infiltration in 24 hours or the soil water deficit. Therefore, a larger volume of runoff occurs at a low soil water deficit and little runoff occurs at a high soil water deficit. Predicted runoff will equal the daily rainfall when the soil water deficit is zero (i.e. the soil is saturated)

In PERFECT, the estimation of the retention parameter *S* involves a series of functions initially based on the input curve number parameter (*CN*2(*bare*)) as depicted in Figure 2.1. This *CN2(bare)* parameter represents the rainfall versus runoff response for average antecedent moisture conditions and for bare and untilled soil. This curve number is modified within PERFECT to account for crop cover, surface residue cover and surface roughness. The retention parameter is related to available soil water using a modified form of the equation from Knisel (1980):

$$S = Smx\left[1.0 - \sum WF_i \frac{\max(SW_i, 0.0)}{SWMAX_i}\right] \qquad 2.2$$

Smx is the maximum value of the retention parameter *S* (dry antecedent conditions)
SW_i is the current available soil water for layer *i* (mm)
$SWMAX_i$ is the soil water capacity at porosity for layer *i* (mm)
WF_i is the weighting factor for layer *i*

The soil water content used in runoff calculations is summed over the total profile depth. The weighting factor WF_i is determined from Knisel (1980) as:

$$WF_i = 1.016\left[e^{-4.16\frac{DEPTH_i}{DEPTH_{ndeps}}} - e^{-4.16\frac{DEPTH_{i+1}}{DEPTH_{ndeps}}}\right] \qquad 2.3$$

WF_i is the weighting factor for layer *i*
$DEPTH_i$ is the depth at bottom of profile layer *i* (mm)
ndeps is the number of profile layers in the soil

The weighting factor allows for more emphasis to be placed on the upper soil profile layers when determining *S* from the current soil water status. The maximum value of *S* is determined from Knisel (1980) as:

$$S_{mx} = 254\left(\frac{100}{CN1} - 1\right) \qquad 2.4$$

Smx is the maximum value of the retention parameter *S*
*CN*1 is the curve number for driest antecedent moisture conditions

The following polynomial expression from Knisel (1980) relates *CN*1 to the input parameter *CN*2.

$$CN1 = -16.91 + 1.348\ CN2 - 0.01379\ CN2^2 + 0.0001177 CN2^3 \qquad 2.5$$

*CN*1 is the curve number for driest antecedent moisture conditions
*CN*2 is the curve number for average antecedent moisture conditions

Previous attempts to determine curve number for different soil types and management strategies have been undertaken by different authors. For example, USDA-SCS (1972) described procedures to derive curve number for a range of soils, while Rawls *et al*. (1980) attempted to adjust curve number for surface cover. However, in these examples, any adjustment in curve number to account for surface cover is constant during the simulation. Hence curve number is often considered as a static parameter. In PERFECT, effects of cover on curve number are estimated from a relationship originally developed from rainfall simulator data (Glanville *et al*., 1984). Since PERFECT maintains a daily balance of both crop and residue cover, curve number is a dynamic parameter that changes on a daily basis during the simulation. Effects of surface and crop cover on runoff are estimated using a generic form of the function developed in the original PERFECT model.

$$CNcov = CNbare - CNRED\ .COVER \qquad 2.6$$

CNcov is the curve number adjusted for cover
CNbare is the curve number for soil with no cover
CNRED is the maximum reduction in curve number at 100% cover
COVER is combined surface and crop cover (%)

In the COVER term, it is assumed that standing crop cover has half the effectiveness of surface cover to reduce runoff. That is,

$$COVER = COVM + 0.5\ CCOV \qquad 2.7$$

CCOV is percent crop cover
COVM is percent surface residue cover

In addition, we have defined a relationship between curve number and surface roughness. Tillage type and rainfall since tillage are used as predictors of surface roughness. The influence of roughness on runoff was incorporated into PERFECT by developing a relationship between curve number and cumulative rainfall since tillage (Littleboy *et al*. 1996a)

$$CNtill = CNcov + RoughnessRatio.CNrough\left[\frac{\sum Rain}{CNrain} - 1\right] \qquad \sum Rain < CNrain \qquad 2.8$$

CNtill is the curve number adjusted for surface roughness
CNrough is the maximum reduction in curve number due to roughness
CNrain is the cumulative rainfall required to remove surface roughness
Σ*Rain* is the cumulative rainfall since tillage (mm)
RoughnessRatio is the effect of different tillage implements (Table 4.1)

The relationship in the Equation 2.8 shows that following tillage, curve number is reduced by *CNrough* multiplied by *RoughnessRatio* units. Subsequent rainfall increases curve number linearly at a rate dependent on the value of *CNrain*. Effects of tillage on curve number occur until cumulative rainfall since tillage exceeds *CNrain* after which it is assumed that rainfall energy has removed all surface roughness. The basis of this relationship was the work of Freebairn and Gupta (1990) who reported that cumulative rainfall since tillage is an appropriate index of the energy input from rainfall to the soil surface.

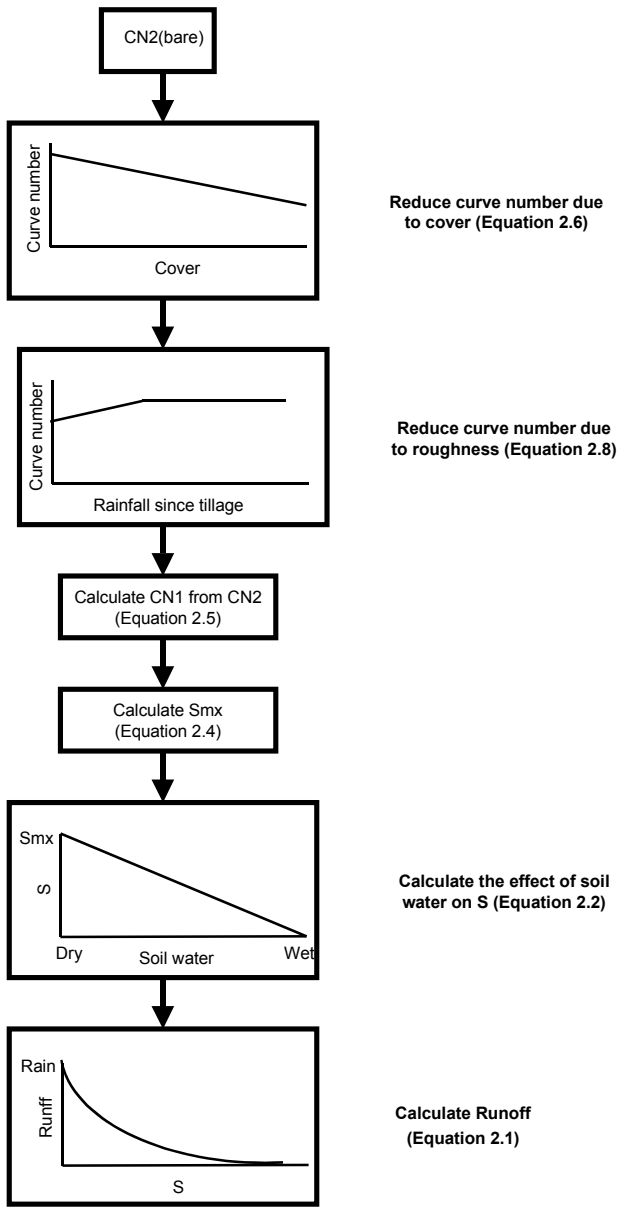

Figure 2.1 Flow diagram of the curve number method in PERFECT

2.2 Soil evaporation

Evaporation of water from the soil surface is based on Ritchie's two-stage evaporation algorithm (Ritchie 1972). After infiltration, drying occurs at potential rate up to a specified limit (Stage I), then at a rate reflecting diffusion processes that are assumed proportional to the square root of time (Stage II). This relatively simple model was originally developed by Ritchie using lysimeter data. Although the model is conceptually simple, it is quite complex in an operational sense. Readers are referred to the original paper by Ritchie (1972) which provides a flow diagram of all the interactions between Stage I and Stage II drying.

In PERFECT, soil evaporation removes water from the two upper soil horizons and drying can continue below wilting point until air-dry. The soil in layer 1 dries to the defined air-dry moisture content. In layer 2, the soil dries to a moisture content at the mid point between air-dry and wilting point. PERFECT includes two modifications to the original Ritchie model. Firstly, Stage I drying recommences after any rainfall event but is limited by the amount of infiltration. This contrasts with the original algorithm (Ritchie 1972), where all cumulative Stage II drying had to be replenished by infiltration before Stage I drying could recommence. Secondly, effects of crop residue on potential Stage I drying rate have been incorporated, based on data reported in Adams *et al*. (1976). Potential soil evaporation is calculated from pan evaporation and crop cover. Pan evaporation is used within PERFECT rather than techniques such as Penman-Monteith or Priestly-Taylor because the dynamic wheat and sunflower crop models were developed using pan evaporation as the potential evaporative demand factor.

$$E\,pot = \frac{PAN.(100 - CCOV)}{100} \qquad LAI > 0.3 \qquad 2.9$$

$$E\,pot = \frac{PAN.(100 - GCOV)}{100} \qquad LAI < 0.3 \qquad 2.10$$

Epot is potential soil evaporation (mm)
PAN is the daily pan evaporation (mm)
CCOV is total crop cover (%)
GCOV is the crop cover effective for transpiration (%)
LAI is the leaf area index ($cm^2\ cm^{-2}$)

Potential soil evaporation rate is further modified for crop residue effects using the relationship given by Adams *et al*. (1976). PERFECT assumes that different types of crop residue have the same effect on soil evaporation.

$$Epot = Epot\ .\ e^{-0.22CRES} \qquad 2.11$$

Epot is potential soil evaporation (mm)
CRES is the weight of crop residue ($t\ ha^{-1}$)

Stage I drying commences after infiltration. Stage I soil evaporation will equal the potential soil evaporation rate until the cumulative Stage I drying exceeds the value of the parameter *U* (the upper limit of Stage I drying). Cumulative Stage I drying is reduced by any amount of infiltration that occurs. When this limit is exceeded, Stage II drying commences based on Ritchie (1972).

$$SE2 = CONA\left(\sqrt{t} - \sqrt{t-1}\right) \qquad 2.12$$

*SE*2 is Stage II soil evaporation (mm)
CONA is an input parameter
t is days since rainfall

Stage II drying on any day can not exceed the daily potential soil evaporation rate. In very dry profiles, Stage II drying can be limited by soil water deficit in the top two layers of the profile. *CONA* represents the slope of the Stage II drying curve when cumulative soil evaporation is plotted against the square root of time

2.3 Soil water redistribution and deep drainage

Soil water status is updated daily after accounting for runoff. Infiltration is added to the top layer of the soil profile. Soil water redistribution is calculated using a linear cascading technique based on the procedure developed for CREAMS (Knisel 1980). Redistribution of water from the lowest soil horizon is assumed lost to the soil as deep drainage. A simplified structure of the linear cascading model is presented in Figure 2.2. In this idealised structure, each soil horizon is represented by a bucket. A pipe in each bucket allows water to drain only when the level of water is above the pipe. A tap in the pipe limits the rate at which water moves from one bucket to the next. Capacity of each bucket is equivalent to the saturated water content (SAT) of the soil horizon. Height of the pipe in each bucket represents the drained upper limit (UL) of the soil horizon while a tap in each pipe symbolises the saturated hydraulic conductivity (Ksat) of the soil horizon. This type of water balance model is appropriate for the daily time-step rainfall data that are readily available. More detailed soil water balance models exist but such models invariably require rainfall data measured at more frequent intervals (e.g. hourly data).

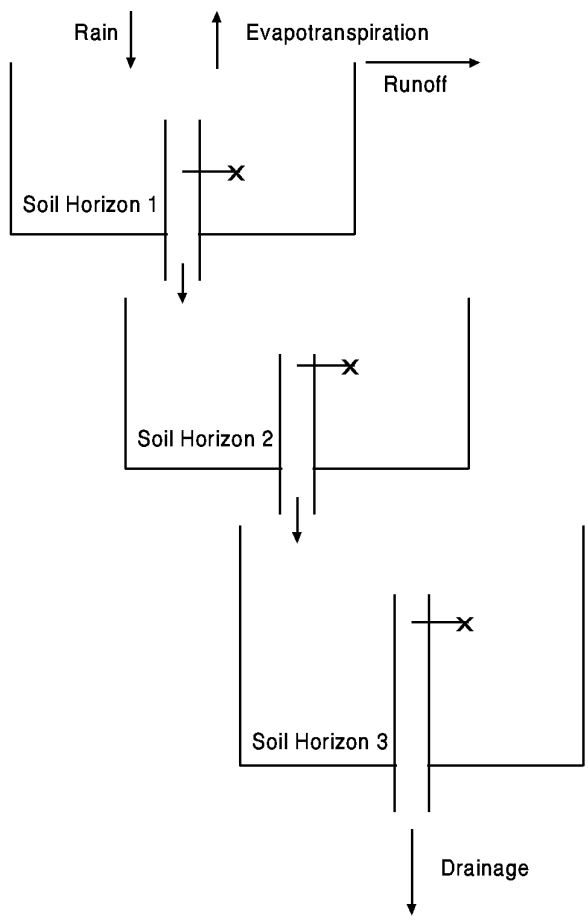

Figure 2.2 Idealised structure of the cascading bucket model for soil water redistribution and drainage in PERFECT

Soil water redistribution and deep drainage is calculated using the following functions from CREAMS (Knisel (1980).

$$D_i = T_i(FC_i - SW_i) \qquad SW_i > FC_i \qquad 2.13$$

D_i is the daily drainage from layer *i* (mm)
T_i is the drainage factor for layer *i* (0.0 to 1.0 range)
FC_i is the available field capacity of layer *i* (mm)
SW_i is the current available soil water for layer *i* (mm)

This equation assumes that drainage from a layer only occurs when soil moisture status is above field capacity. The drainage factor T_i determines the proportion of soil water above field capacity draining to a lower profile layer (Knisel 1980). This factor is based on the input saturated hydraulic conductivity and assumes that the drainage factor equals unity when ($SWMAX - FC$) ≤ 12 $Ksat$).

$$T_i = \frac{48}{2.0\frac{SWMAX_i - FC_i}{Ksat_i} + 24} \qquad 2.14$$

T_i is the drainage factor for layer *i* (0.0 to 1.0 range)
FC_i is the available field capacity of layer *i* (mm)
$SWMAX_i$ is the soil water capacity at porosity for layer *i* (mm)
$Ksat_i$ is the saturated hydraulic conductivity of layer *i* (mm hr^{-1})

In PERFECT, we have a further limitation to the amount of drainage occurring from a single layer as estimated using equation 2.13. Drainage can also be limited by the value of Ksat. We assume that drainage within a single day cannot exceed the value of Ksat over 12 hours. That is, drainage is the minimum of the values estimated using Equations 2.13 and 2.15. The arbitary value of 12 hours was selected because it is inherent in the calculation of the drainage factor in Equation 2.14.

$$D_i = 12\ Ksat_i \qquad 2.15$$

D_i is the daily drainage from layer *i* (mm)
$Ksat_i$ is the saturated hydraulic conductivity of layer *i* (mm hr^{-1})

Drainage can be limited by the soil water deficit in the layer immediately below the draining layer. If the layer immediately below cannot hold the extra water then drainage is reduced. In the case of a soil layer with restricted drainage, the algorithm allows infiltration to be routed upwards towards the soil surface. Any excess water at the soil surface is added to runoff. Any drainage of water from the lowest profile layer is assumed to be deep percolation. PERFECT does not consider any restrictions to water movement below the soil. That is, any deep drainage is lost instantaneously.

2.4 Infiltration

Infiltration is the amount of rainfall left after all runoff has occurred. An additional algorithm to determine water infiltrating to lower profile layers through cracks has been included. This algorithm can be optionally invoked by the user and should only be used when there is evidence of soil cracking. The following criteria must be satisfied for infiltration via cracks to occur:

- the maximum amount of rainfall can be infiltrated into cracks is a user-defined parameter;
- rainfall must be greater than 10mm;
- the top two profile layers must be less than 30% of field capacity;
- cracks will extend down through all layers less than 30% of field capacity;
- cracks are filled from lowest layers first; and
- any layer can only fill to 50% of field capacity.

3.0 Crop growth models

This section provides an overview of the crop growth models in PERFECT. Further information regarding any crop model can be obtained from the recommended references. In PERFECT, crop growth and water use can be modelled at different levels of complexity ranging from a simple crop factor water use model to a dynamic crop growth and yield prediction model.

3.1 Crop factor model

This is the simplest level of crop model within PERFECT. Transpiration is calculated from the user-defined annual distribution of green cover and a crop factor.

$$TRANS_i = DFAC_i \,.\, POTT \,.\, CF \qquad 3.1$$

TRANS$_i$ is daily transpiration (mm) from profile layer *i*
DFAC$_i$ is the root density and penetration factor for layer *i*
POTT is potential plant transpiration (mm)
CF is the user-defined crop factor

Transpiration will be reduced under conditions when available soil water is limiting. Potential transpiration is calculated from pan evaporation and crop cover.

$$POTT = CCOV \,.\, PAN \qquad 3.2$$

PAN is the daily pan evaporation (mm)
CCOV is total crop cover (%)

Transpiration is removed from the individual layers of the soil profile using a generic root penetration and root density equation. The root penetration factor (*ROOT*) simply represents whether the roots have penetrated individual soil layers. The root density factor (*DENSITY*) assumes:

- root density does not limit transpiration to a soil depth of 30cm;
- beyond 30cm, root density decreases linearly;
- at the maximum root depth (*DWEMAX*), root density limits transpiration from that soil layer on any single day by 90%.

The functions to calculate the root penetration and root density factors are:

$$ROOT_i = \left[\frac{DWE - DEPTH_i}{DEPTH_{i+1} - DEPTH_i}\right] \qquad DEPTH_i < DWE < DEPTH_{i+1} \qquad 3.3$$

$$ROOT_i = 1.0 \qquad DWE > DEPTH_{i+1}$$
$$ROOT_i = 0.0 \qquad DWE < DEPTH_i$$

$$DENSITY_i = \left[1.0 - 0.9\frac{DEPTH_i - 300}{DWEMAX - 300}\right] \qquad DEPTH_i > 300mm \qquad 3.4$$

ROOT$_i$ is the root penetration factor for layer *i*
DENSITY$_i$ is the root density factor for layer *i*
DEPTH$_i$ is the depth at bottom of profile layer *i* (mm)
DWE is the current root depth
DWEMAX is the maximum root depth

The density factor *DFAC*$_i$ in Equation 3.1 is calculated from the product of these factors:

$$DFAC_i = ROOT_i \,.\, DENSITY_i \qquad 3.5$$

$DFAC_i$ is the root density and penetration factor for layer *i*
$ROOT_i$ is the root penetration factor for layer *i*
$DENSITY_i$ is the root density factor for layer *i*

The crop factor model estimates biomass from the concept of water use efficiency where biomass is linearly related to transpiration.

$$DRYM = WUE \,.\, TRANS \qquad 3.6$$

DRYM is total above ground biomass (g m^{-2})
TRANS is total daily transpiration (mm)
WUE is the water use efficiency (g m^{-2} mm^{-1})

At harvest, a proportion of total above-ground biomass is removed using the harvest index.

$$YIELD = DRYM \,.\, HI \qquad 3.7$$

YIELD is the harvest yield (g m^{-2})
DRYM is total above ground biomass (g m^{-2})
HI is the user-defined harvest index (0.0 to 1.0 range)

Phenology for this model is specified by the user-defined input of the number of days from planting to harvest. In summary, the crop factor model is a very simple crop growth model that has been included in PERFECT primarily to act as a water use model. It requires inputs that can be derived from field data or relevant literature (e.g. Doorenbos and Pruitt 1977).

3.2 Generic crop model

A simple, generic crop growth model has been included in PERFECT Version 3.00 to enable the simulation of any crop. The user must specify a range of parameters describing leaf area development, biomass accumulation, phenology and root growth. This model is also capable of growing crops in a multiple harvest or ratoon sequence for crops such as sugar cane or lucerne.

Leaf area index (LAI) development is based on the functions from the EPIC model (Williams 1983) and is determined from user-defined inputs; *viz*, maximum LAI, proportion of growing season at which maximum LAI occurs, two pairs of points (LAI and proportion of growing season) that determine the shape of the LAI curve, and a senescence parameter. LAI development is driven by thermal time. An S-Curve function is used to define LAI development up to the time when maximum LAI occurs. After that time, a leaf senescence algorithm is used to reduce LAI. Daily increment in LAI development is calculated from maximum LAI, heat units, stress factors and shape parameters.

$$\Delta LAI = \Delta HUF \,.\, LAIMAX \,.\, \sqrt{REG} \qquad 3.8$$

Δ*LAI* is the daily increment in LAI (m^2 m^{-2})
LAIMAX is the user-defined maximum LAI (m^2 m^{-2})
Δ*HUF* is the daily change in heat unit factor
REG is the most limiting stress factor (water or temperature)

The heat unit factor is:

$$HUF = \frac{HUI}{HUI + e^{AH(1) - AH(2).HUI}} \qquad 3.9$$

HUF is the heat unit factor
HUI is the current proportion of growing season
AH_1 and AH_2 are shape parameters to ensure an S-shaped LAI development curve

The proportion of the growing season is calculated by:

$$HUI = \frac{AHU}{PHU} \qquad 3.10$$

HUI is the current proportion of growing season
AHU is accumulated degree days (^oC)
PHU is the user-defined degree days for crop maturity

Accumulated degree days are calculated from the commonly applied concept of accumulating daily temperature after subtracting a user-defined base temperature.

$$AHU = \sum \left[\frac{Tmax - Tmin}{2} - BASE \right] \qquad 3.11$$

AHU is accumulated degree days (^oC)
Tmax is the maximum daily temperature from weather data (^oC)
Tmin is the minimum daily temperature from weather data (^oC)
BASE is the user-defined base temperature (^oC)

The senescence of LAI is calculated using the function from Williams (1983):

$$LAI = LAIMAX \left[\frac{1 - HUI}{1 - PLAI} \right]^{AD} \qquad HUI > PLAI \qquad 3.12$$

LAI is the leaf area index ($m^2\ m^{-2}$)
LAIMAX is the maximum LAI achieved during the crop ($m^2\ m^{-2}$)
HUI is the current proportion of growing season
PLAI is the user-defined proportion of growing season for maximum LAI
AD is the user-defined senescence parameter

Biomass accumulation is determined from intercepted radiation, radiation use efficiency, stress factors and a daylength factor (Williams 1983).

$$DRYM = REG\ .PAR\ .RUE\ .(1 + HRLT)^3 \qquad 3.13$$

$$PAR = 0.5\ .\ RAD\ .\ (1 - e^{-0.65 LAI}) \qquad 3.14$$

DRYM is biomass accumulation ($g\ m^{-2}$)
REG is the most limiting stress factor (water or temperature)
PAR is intercepted radiation ($MJ\ m^{-2}\ day^{-1}$)
RUE is the radiation use efficiency ($g\ m^{-2}\ MJ^{-1}$)
HRLT is the difference in daylength between the current and previous day
RAD is the daily radiation ($MJ\ m^{-2}\ day^{-1}$) from weather data
LAI is the leaf area index ($m^2\ m^{-2}$)

This crop growth model estimates water and temperature stress factors on leaf growth and biomass accumulation. The minimum value of these factors (i.e. the most limiting) is always used:

$$REG = \min(TSI, WSI) \qquad 3.15$$

$$TSI = \sin\left[0.5\pi \frac{TEMP - BASE}{TOPT - BASE}\right] \qquad 3.16$$

$$WSI = \frac{TRANS}{POTT} \qquad 3.17$$

REG is the most limiting stress factor (water or temperature)
TSI is the temperature stress index
WSI is the water stress index
TEMP is the average daily temperature from weather data (^oC)
BASE is the user-defined base temperature (^oC)
TRANS is total daily transpiration (mm)
POTT is the potential daily transpiration (mm)

Transpiration is calculated from the potential transpiration, root depth and leaf area index.

$$POTT = \frac{PAN.LAI}{3} \qquad LAI<3 \qquad 3.18$$

$$POTT = PAN \qquad LAI>3 \qquad 3.19$$

$$TRANS_i = DFAC_i \,.\, POTT \qquad 3.20$$

$TRANS_i$ is daily transpiration (mm) from profile layer *i*
POTT is the potential daily transpiration (mm)
LAI is the leaf area index ($m^2\ m^{-2}$)
$DFAC_i$ is the proportion of root in layer *i* (Equations 3.3,3.4 & 3.5)
PAN is the daily pan evaporation (mm)

Grain yield is estimated by multiplying dry matter at maturity by a harvest index.

$$YIELD = DRYM \,.\, HI \qquad 3.21$$

YIELD is the harvest yield ($g\ m^{-2}$)
DRYM is total above ground biomass at maturity ($g\ m^{-2}$)
HI is the user-defined harvest index (0.0 to 1.0 range)

Root growth is estimated by:

$$DWE = DWE + \Delta DWE \qquad 3.22$$

DWE is the current root depth (mm)
ΔDWE is the user-defined root growth ($mm\ day^{-1}$)

Root depth is constrained by either the maximum user-defined root depth or the maximum soil profile depth. The model also allows the user to grow crops in a ratoon sequence, with the user specifying the number of ratoons. For a ratoon sequence, at each harvest above-ground biomass and cover is removed. Root depth is unaffected. The crop parameter representing potential

maximum LAI and degree days to maturity can be optionally adjusted by a liner scaling factor.

3.3 Dynamic crop model - wheat

The Woodruff-Hammer wheat model in PERFECT V3.0 was originally documented in Hammer *et al*. (1987). This model simulates accumulation of above and below-ground biomass in the plant, growth of leaf area, grain filling and final grain yield, and phenology (rate of development of a plant). The model assumes that wheat yield is closely related to crop growth around anthesis (Woodruff and Tonks, 1983).

$$GYI = \frac{TRANS}{PAN\ TM} \qquad 3.23$$

GYI is the yield index
TRANS is total transpiration (mm) for ±10 days around anthesis
PAN is total pan evaporation (mm) for ±10 days around anthesis
TM is mean daily temperature (^{o}C) for ±10 days around anthesis

Grain yield is estimated by the minimum value of yield estimated from the two following equations (Y_a and Y_b).

$$Y_a = \max(25, \min(120, (0.02\ .\ DRYMA)) + 2507\ GYI + 121719\ GYI^2 \qquad 3.24$$

$$Y_b = 0.87\ DRYMA \qquad 3.25$$

DRYMA is the total above-ground dry matter at anthesis (g m^{-2})
GYI is the grain yield index (Equation 3.23)

The dry matter at anthesis term was incorporated into the model to improve predictions for low yielding crops. Dry matter, transpiration and phenology are estimated dynamically within the model. In the original version of PERFECT, biomass was calculated from the concept of water use efficiency (WUE), the amount of biomass produced per millimetre of transpiration. Biomass accumulation is calculated as the product of WUE and transpiration. This approach is most appropriate for environments where water is limiting. Under severe water-limiting conditions, biomass accumulation in a day may be negative indicating death of some plant material. An empirically based relationship described by Fischer (1979) is used to estimate crop growth rate.

$$WUE = 10.2 - 1.3PAN + 0.05PAN^2 \qquad 3.26$$

$$\Delta DRYM = WUE\ .\ TRANS \qquad 3.27$$

Δ*DRYM* is daily crop growth (g m^{-2} day^{-1})
WUE is the water use efficiency (g m^{-2} mm^{-1} day^{-1})
TRANS is daily transpiration (mm)
PAN is pan evaporation (mm)

The relationship between WUE and potential transpiration limits the amount of biomass that can be produced under dry atmospheric conditions (when potential transpiration is high). This function is a simplification of the vapour pressure deficit (VPD) algorithms in more detailed plant growth models (e.g. CERES). WUE is highest in high humidity conditions (low VPD) and lowest in low humidity conditions (high VPD). Instead of estimating VPD directly, the wheat submodel in PERFECT uses the relationship between potential transpiration and WUE to represent this process. In PERFECT Version 3.0, the original biomass accumulation algorithm has been modified to include the effects of radiation limiting growth. Radiation limited yield is calculated by:

$$DRYM = RUE \left(1.0 - e^{EXC.LAI}\right) RAD \qquad 3.28$$

DRYM is potential biomass as limited by radiation (g m^{-2})
RUE is radiation use efficiency (g m^{-2} MJ^{-1}) (assumed to equal 1.84 for wheat)
RAD is solar radiation (MJ m^{-2})
LAI is the leaf area index (m^2 m^{-2})
EXC is the extinction coefficient read from the crop parameter file

On each day of the simulation, biomass accumulation is calculated from the minimum of radiation-limited growth and water-limited growth (Equations 3.27 and 3.28). Crop growth rate is partitioned and accumulated into dry matter and leaf area using a root:shoot ratio and leaf area ratio, both dependent on stage of development. A LAI (m^2 of leaf per m^2 of ground surface) is calculated from accumulated biomass using relationships outlined in Hammer *et al.* (1987). The amount of biomass partitioned into leaf area is dependent on the stage of development of the plant. Under water-limiting conditions, LAI is further modified by a water stress index. These concepts are simplifications of the algorithms of more detailed plant growth models such as CERES (e.g. Jones and Kiniry 1986). In CERES, biomass is partitioned into individual leaves, and the model calculates the number (NLEAF) and area (LAREA) of individual leaves on a plant. LAI is simply the product of NLEAF and LAREA. In PERFECT, biomass is partitioned into leaf area index instead of aggregated area of individual leaves.

Senescence of leaf area after anthesis is determined from:

$$\Delta LAI = -LAI \left[\frac{TEMP - BASE}{TMM}\right] WSI \qquad 3.29$$

Δ*LAI* is the daily change in LAI
LAI is the current leaf area index (m^2 m^{-2})
TEMP is daily average temperature (^oC)
BASE is the user defined base temperature (anthesis to maturity)
TMM is degree days required until maturity
WSI is the water stress index

This relationship reduces LAI as a function of temperature and water stress. High temperatures and high water stress will accelerate leaf senescence. The term *TMM* is initially set at the total number of degree days required from anthesis to maturity and is reduced daily by the average temperature minus the base temperature. Therefore, the ratio of (*TEMP-BASE*):(*TMM*) will approach unity as the crop approaches maturity.

Plant transpiration is calculated as the minimum of potential plant water extraction rate and potential transpiration rate (after Hammer *et al.*, 1987). Potential transpiration is the amount of water a plant requires for optimal growth on any day and is determined from LAI and pan evaporation. Potential extraction is the amount of water the soil can supply to the plant and is calculated from soil water status, root depth and root density functions. If potential transpiration is less than potential extraction, then water is not limiting. If potential transpiration is greater than potential extraction, then water is limiting and an index of water stress on crop growth is calculated as the ratio of potential extraction to potential transpiration.

The daily potential transpiration rate is the maximum amount of water that can be transpired by the plant. It can never exceed pan evaporation minus soil evaporation and is expressed as a proportion of pan evaporation. The potential transpiration is the maximum of Equations 3.30 and 3.31 while not exceeding Equation 3.32.

$$\text{Tpot} = \frac{\text{GCOV . PAN}}{100} \qquad 3.30$$

Tpot is potential transpiration (mm)
GCOV is the crop cover effective on transpiration (%)
PAN is pan evaporation (mm)

$$\text{Tpot} = \frac{0.006 \text{ . POPN . TEMP}}{100} \qquad 3.31$$

Tpot is potential transpiration (mm)
POPN is the plant density at establishment (plants m^{-2})
TEMP is average daily temperature (^{o}C)

$$\text{Tpot} = \text{PAN} - \text{SE} \qquad 3.32$$

Tpot is potential transpiration (mm)
PAN is pan evaporation (mm)
SE is soil evaporation (mm)

The proportion of crop cover effective for transpiration *GCOV* is defined by:

$$\text{GCOV} = 100\left(1 - e^{-\text{EXC}_1 \text{LAI}}\right) \qquad 3.33$$

GCOV is the crop cover effective for transpiration (%)
EXC_1 is the extinction coefficient 1 from the crop parameter file
LAI is the leaf area index (m^2 m^{-2})

The wheat model in PERFECT applies two extinction coefficients that are defined in the crop parameter file. The coefficient *EXC* determines total plant cover and is used in the radiation interception, hydrology and erosion algorithms. The second extinction coefficient (EXC_1) is used to estimate only that part of plant cover that can actively transpire (Equation 3.33). Total crop cover *CCOV* is related to leaf area index by:

$$\text{CCOV} = 100\left(1 - e^{-\text{EXC LAI}}\right) \qquad 3.34$$

CCOV is crop cover (%)
EXC is the extinction coefficient from the crop parameter file
LAI is the leaf area index (m^2 m^{-2})

CCOV is used in calculating potential soil evaporation and represents the proportion of incident energy intercepted by the crop. *GCOV* is greater than *CCOV* to take account of sensible heat transfer from the soil back through the canopy. This increases potential transpiration when the soil surface is dry and actual soil evaporation is less than potential soil evaporation.

Soil water uptake is calculated from each profile layer to the current root depth and is determined from:

$$\text{TRANS}_i = \text{ROOT}_i \text{ . TSI . FACTOR}_i \text{ . MCFC}_i^{1.67} \qquad 3.35$$

$TRANS_i$ is transpiration from layer *i* (mm)
TSI is the temperature index
$ROOT_i$ is root penetration factor for layer *i*

FACTOR$_i$ is the root density factor for layer *i*
MCFC$_i$ is the ratio of soil water to field capacity for layer *i*

The term d_i expresses how far roots have penetrated into each profile layer. If root depth is greater than the profile layer depth d_i is 1.0. Similarly, this factor will be equal to 0.0 when the root depth is less than the layer depth. It will range between 0.0 to 1.0 when the root depth is within a profile layer. It is represented as:

$$ROOT_i = \frac{DWE - DEPTH_i}{DEPTH_{i+1} - DEPTH_i} \qquad 3.36$$

DWE is root depth (mm)
DEPTH$_i$ is the depth at bottom of profile layer *i* (mm)

The term *FACTOR*$_i$ describes the distribution of root density throughout the profile. It represents the potential water uptake per unit depth of a given soil layer.

$$FACTOR_i = (DEPTH_{i+1} - DEPTH_i)\left(0.01498 - (\frac{0.00424\, DEPAVE_i}{1000})\right) \qquad 3.37$$

FACTOR$_i$ is the root density factor for layer *i*
DEPTH$_i$ is the depth at bottom of profile layer *i* (mm)
DEPAVE$_i$ = average depth of profile layer *I* (mm). i.e. ($DEPTH_{i+1}$ + $DEPTH_i$) / 2.0

The value of the *FACTOR*$_i$ is limited by:

$$0.011167\,(DEPTH_{i+1} - DEPTH_i) < FACTOR_i < 0.014667\,(DEPTH_{i+1} - DEPTH_i) \qquad 3.38$$

The term *MCFC*$_i$ in equation 3.35 is the ratio of soil water to field capacity.

$$MCFC_i = \frac{SW_i}{FC_i} \qquad 3.39$$

MCFC$_i$ is the ratio of soil water to field capacity for layer *i*
FC$_i$ is the available field capacity of layer *i* (mm)
SW$_i$ is the current available soil water for layer *i* (mm)

The phenology algorithm for the wheat submodel estimates dates of emergence, anthesis, physiological maturity and harvest using the variable *PSTAGE*. A value for *PSTAGE* of 1 represents emergence, 2 for anthesis, 3 for maturity and 3.1 for harvest. Three options are available for estimating phenology:

The first option is where the user can define the specific number of days from planting to emergence, emergence to anthesis, and anthesis to harvest.

The second option calculates phenology using the concept of cumulative degree days, where a degree day is:

$$DD = TEMP - BASE \qquad 3.40$$

DD is the degree days in a single day (^oC)
TEMP is the average daily temperature (^oC)
BASE is the user-defined base temperature (^oC)

The base temperature is dependent on the current phenological stage of the crop. Recommended base temperatures are zero from planting to anthesis, and six from anthesis to physiological maturity. Total degree days is dependent on variety and time of planting and are given in Hammer et al. (1987) for early and late maturity genotypes.

The third option is a fully dynamic phenology equation where phenology between emergence and anthesis is calculated by:

$$ANTH = 0.014\left[1.0 - e^{-0.4623(temp-4.54)}\right]\left[1.0 - e^{-PP(DAYLEN-(PP17.44)}\right] \qquad 3.41$$

$$ANTH = 0.6\ ANTH \qquad \text{For a long season variety and } DAYLEN < 11.95 \qquad 3.42$$

ANTH is rate of phenological development on day i after emergence
TEMP is the average temperature (^oC) on day i
PP is the photoperiod constant depending on variety
DAYLEN is estimated daylength (hr) on day i

This function calculates the phenological stage on day i after emergence and up to anthesis. Growth degree days are still used to determine phenology from planting to emergence and anthesis to harvest. The photoperiod constant pp equals 0.24 for quick early maturing genotypes, 0.507 for late maturing genotypes, and 0.6851 for long season genotypes.

The wheat model considers stress relating to water through the use of a water stress index that ranges from 0.0 to 1.0. A value of 0.0 represents no stress while a 1.0 indicates maximum stress. Crop growth is reduced by the most stringent stress index which is multiplicative on the crop growth rate. For example, a water stress index of 0.5 will reduce the daily crop growth rate by 50%. Water stress index *WSI* is:

$$WSI = \frac{TRANS}{Tpot} \qquad 3.43$$

WSI is the water stress index
TRANS is total estimated daily transpiration (mm)
Tpot is the potential daily transpiration (mm)

3.4 Dynamic crop model - sunflower

The sunflower growth model of Hammer and Goyne (1982) is a simple dynamic growth model derived from field studies investigating environmental responses of growth, development and yield. The model is based on the yield prediction equation:

$$YIELD = e^{6.857 + 0.00114DRYMA - 0.0190\sum(WSI)/30} \qquad 3.44$$

YIELD is grain yield (kg ha^{-1})
DRYMA is total dry matter at anthesis (kg ha^{-1})
Σ*WSI* is cumulative water stress $\pm$15 days around anthesis

Therefore, the model needs to estimate crop growth, water use and timing of anthesis to calculate yield. Crop growth is determined from transpiration using the same function as the wheat model:

$$WUE = 10.2 - 1.3PAN + 0.05PAN^2 \qquad 3.45$$

$$\Delta DRYM = WUE \,.\, TRANS \qquad 3.46$$

Δ*DRYM* is daily crop growth (g m^{-2} day^{-1})
WUE is the water use efficiency (g m^{-2} mm^{-1} day^{-1})
TRANS is daily transpiration (mm)
PAN is pan evaporation (mm)

Daily growth is partitioned using a shoot:root ratio dependent on phenological stage. Above ground growth is accumulated to give total dry matter with LAI estimated from total dry matter using an empirical relationship. Water stress reduces LAI when applicable.

Transpiration for sunflower is determined from functions similar to those used in the wheat model. The sunflower model expresses transpiration as a function of soil water content, LAI, and temperature. Estimated transpiration is constrained by the plants potential transpiration rate, pan evaporation, and the available soil water. The main difference between the wheat model and sunflower model transpiration submodels is in the estimation of the crop cover from LAI. The proportion of crop cover effective for transpiration gcov is defined by:

$$GCOV = 100 \min(LAI, 1.0) \qquad 3.47$$

GCOV is the crop cover effective for transpiration (%)
LAI is the leaf area index (m^2 m^{-2})

Crop cover *CCOV* is related to LAI by:

$$CCOV = 100 \left(1.0 - e^{-EXC \,.\, LAI}\right) \qquad 3.48$$

CCOV is total crop cover (%)
EXC is the extinction coefficient (0.97)
LAI is the leaf area index (m^2 m^{-2})

The sunflower model estimates phenology using functions based on temperature and daylength (Hammer *et al*. 1982). The variable *PSTAGE* determines daily increment in phenological stage of the crop. An accumulated value of 1 represents emergence, 2 for head visible, 3 for anthesis and 4 for physiological maturity.

For planting to emergence,

$$\Delta PSTAGE = 0.0130\,(TEMP - 7.9) \qquad 3.49$$

For emergence to head visible

$$\Delta PSTAGE = 0.00252\,(TEMP - 6.6) - 0.0000327\,PPM\,(TEMP - 6.6)^2 .PPM \qquad 3.50$$

For head visible to anthesis,

$$\Delta PSTAGE = 0.00291\,(TEMP - 3.9) - 0.0000375\,(TEMP - 3.9)^2 \qquad 3.51$$

For anthesis to maturity,

$$\Delta PSTAGE = 0.00140\,TEMP \qquad 3.52$$

$\Delta PSTAGE$ is the daily increment to phenological stage
TEMP is the average daily temperature (^oC)
PPM is the photoperiod factor

The photoperiod factor *PPM* equals 1.0 for 'quick' cultivars and the following function is used for 'medium' cultivars:

$$PPM = 1.0 - \frac{0.24}{1.0 + e^{-42.33 - 3.12\ DAYLEN}} \qquad 3.53$$

PPM is the photoperiod factor
DAYLEN is the day length (hr)

3.5 Crop death due to extreme water stress

One limitation of PERFECT version 1.00 was its inability to kill a crop in times of extreme water stress. Crop growth would cease if no water was available but it would restart immediately if rain fell. In PERFECT Version 3.0, an optional decision rule to allow for crop death due to extreme water stress has been added. The decision rules to kill a crop due to extreme water stress are based on the water stress index (*WSI*) being less that the user defined threshold (*THRESHOLD*) for a user-defined number of consecutive days (*NKILL*). An additional criterion is that crops cannot be killed due to extreme water stress once flowering has occurred. The incorporation of these decision rules into PERFECT is particularly useful when simulating plant growth in soils with low water holding capacities, or in years where water is severely limited.

4.0 Residue and tillage

The residue and tillage submodel is comprised of three related components; residue decay through time, residue reduction by tillage and a cover weight vs percent cover relationship. A daily balance of the weight of crop residue on the surface is maintained. Crop dry matter remaining after harvest is added to the residue pool. Residue incorporation during tillage operations and rates of residue decomposition are related to previous crop type and tillage implement using the functions developed by Sallaway *et al.* (1989). Percentage of the ground surface with residue cover is estimated from residue weight on a daily basis.

The residue submodel is a critical component within PERFECT because it allows the model to quantify the effects of different land management practices. For example, changing a tillage implement will affect both surface cover and surface roughness which in turn affects runoff, soil evaporation and erosion. Changing crop types will produce varying amounts of residue with different levels of effectiveness which in turn affects hydrology and erosion. Maintaining a surface residue and surface roughness balance is a crucial component of any cropping systems model. Specifically, estimates of surface cover are used to modify the curve number parameter for runoff prediction, the potential evaporation rate in the soil evaporation algorithm and the amount of soil erosion. Tillage also creates varying amounts of surface roughness, dependent on tillage type, which affects the prediction of surface runoff.

The residue decay submodel estimates the natural decay rate (weathering) of stubble after harvest (Sallaway *et al.* 1989). This model assumes an initial high residue decay rate of 15 kg ha^{-1} day^{-1} for 60 days after harvest followed by a lower rate of 3 kg ha^{-1} day^{-1}. That is:

CRES = CRES – 15	within 60 days of harvest	4.1
CRES = CRES – 5	after 60 days since harvest	4.2

CRES is the weight of crop residue (kg ha^{-1})

Factors for residue reduction by tillage are shown in Table 4.1 and were based SOILOSS (Rosewell and Edwards 1988), Sallaway *et al*. (1989), EPIC (Williams 1983) and SWRRB (Williams *et al.* 1985). Residue weight is reduced by the appropriate percentage for the specified tillage implement.

Table 4.1 Residue reductions and surface roughness ratios for different tillage implements

Tillage Implement	Residue reduction (%)	Roughness ratio (Equation 2.8)
Stubble burnt	95	0.0
Disc Plough	60	1.0
Planter	50	0.0
Scarifier	40	0.7
Chisel Plough	35	0.6
Blade plough	20	0.3
Sweep plough	18	0.3
Rod Weeder	10	0.2
Herbicide	0	0.0

The weathering and tillage submodels modify residue weight. PERFECT relates percent cover to residue weight using a generic form of the relationships developed by Sallaway *et al*. (1989). An asymptotic relationship residue weight and percent cover is assumed

$$COVM = MAXRESID\,(1 - e^{-CRES}) \qquad 4.3$$

MAXRESID is the user-defined maximum residue cover (%) for each crop type
COVM is surface mulch cover (%)
CRES is the amount of crop residue (t ha^{-1})

5.0 Soil Erosion

Soil erosion is estimated on a daily basis using functions reported by Freebairn and Wockner (1986) that relate soil erosion to runoff volume, surface and crop cover, rainfall erosivity, soil erodibility, management practice and topography. This submodel predicts soil erosion for each runoff event. Predictions of daily rates of erosion from these types of models may be in error (Littleboy *et al*., 1992a) because of the exclusion of rainfall intensity. However, this type of model is relatively accurate in predicting long-term average annual erosion (Littleboy *et al*., 1992a)

This is a interesting dilemma for both runoff and erosion prediction using daily timestep models. The strength of a daily timestep model is that it uses weather data that are readily available (i.e. daily rainfall data). However, algorithms that operate on a daily timestep tend to ignore processes occurring at a shorter timestep. More detailed models do exist at a shorter timestep but these models invariably require more detailed weather data (e.g. rainfall intensity data). However, rainfall intensity data are rarely available. Therefore, the decision is to either accept the weaknesses of a daily timestep model (for which weather data are readily available) or apply a shorter timestep model (for which data are less available). There are many published examples of stochastic models that can generate shorter timestep weather data from daily data. However, the following question has not been addressed: Is the error involved in the stochastic generation of rainfall intensity data from daily data greater than the error in applying a daily timestep model?

The main limitation to predicting soil loss is in obtaining suitable parameter values and presently, these values are usually derived from measured soil loss data. Therefore, the reliability of soil loss prediction depends on the data available for the particular situation. However, it should be remembered that for the intended uses of PERFECT it is more important to get long term soil loss reasonably correct and to correctly predict the relative differences between management systems, than to accurately predict individual soil loss events.

The parameter of concern to model users is soil erodibility. The cover related parameters are incorporated into the models with cover estimates supplied by other components of PERFECT. Measured values of soil erodibility type parameters and data from which they can be derived are scarce. However, it should be remembered that soil erodibility varies over approximately one half of an order of magnitude (0.1-0.6) while average annual soil loss can vary over three or more orders of magnitude due to management effects. Suitable parameter values for the soil loss models in PERFECT can be derived from rainulator data, so long as the processes active on the rainulator plots are relevant to the field scale of interest.

The Freebairn and Wockner (1986) cover-concentration function was determined from QDPI field data to predict soil movement from the inter-contour bank area for clays soils for situations where peak discharge cannot be adequately predicted. It accounts for variation in soil loss with cover and runoff volume, the main factors that can be managed, and uses the MUSLE slope-length, erodibility and practice factors to provide generality. The model has the following form:

$$E = (16.52 - 0.46\text{COVER} + 0.0031\,\text{COVER}^2)\,\text{LS.K.P.}\frac{Q}{10} \qquad \text{COVER}<50\% \qquad 5.1$$

$$E = (-0.0254\,\text{COVER} + 2.54)\,\text{LS.K.P.}\frac{Q}{10} \qquad \text{COVER}\geq 50\% \qquad 5.2$$

E is the event soil loss (t ha-1)
COVER is combined crop and surface residue cover (%)
Q is runoff volume (mm)
K is the user-defined MUSLE soil erodibility factor (t ha-1 EI30-1)
LS is slope length and steepness factor
P is the user-defined supporting practice factor

The slope length factor LS is calculated using the algorithm from the Revised USLE (Renard *et al.* 1993). Two adjustments have been made. Firstly, in the RUSLE, slope length is assumed to be the horizontal length of the slope. In PERFECT, we assume slope length is the actual distance across the soil surface. Secondly, we convert the user-defined slope-length from metres to feet to apply the RUSLE equations.

$$LS = \left[\frac{\lambda}{72.6}\right]^{(\beta/1+\beta)(10.8\ \sin(\theta)+0.03)} \quad \text{Slope<9\%} \qquad 5.3$$

$$LS = \left[\frac{\lambda}{72.6}\right]^{(\beta/1+\beta)(16.8\ \sin(\theta)-0.5)} \quad \text{Slope}\geq\text{9\%} \qquad 5.4$$

$$\lambda = 3.281\sqrt{LENGTH^2 + AHT^2} \qquad 5.5$$

$$\theta = \arcsin\left(\frac{AHT}{LENGTH}\right) \qquad 5.6$$

$$AHT = \frac{SLOPE\ .\ LENGTH}{100} \qquad 5.7$$

LS is Revised USLE slope length and steepness factor
SLOPE is the slope of the paddock (%)
LENGTH is the length of the slope, or contour bank spacing (m)
BETA is the user-defined rill:interrill ratio

6.0 Paddock management

6.1 Cropping selection

There are a number of different options within PERFECT that define how a user wants to describe a cropping system. A user can specify one or more fixed planting dates. Alternatively, a user can specify a range of criteria (rainfall and soil water content) that must be satisfied for a planting to occur.

Two character alphanumeric codes are used to identify crop types. Unlike previous versions of PERFECT, the two character identification codes used to select a crop are not predefined. PERFECT reads the crop code (e.g. XY) and will open a corresponding crop parameter file called XY.crp. Therefore, these two character codes are simply pointers to crop parameter files. From these files, PERFECT can identify which crop model to use (e.g. crop factor model, generic LAI model, dynamic wheat model or dynamic sunflower model).

6.1.1 *Fixed planting dates*

A fixed planting date assumes that the specified crop will be planted on the same day during each year of the simulation regardless of soil water conditions. The only thing that can prevent a crop being planted is another crop already growing.

A maximum of three crops can be selected. These can be planted in a single year or as a rotation across a number of years. PERFECT contains default parameters for a wide range of different crop types. For this option, the user must define:

- A date of planting (i.e. day month);
- for the wheat and sunflower models only, the user can also define a variety code (which controls rate of crop development) and an establishment density; and
- a minimum fallow length can be defined for each crop. In this way, a user can define short or long fallows in a rotational system.

If more than one crop has been defined, then PERFECT assumes that the crops are growing in sequence. For example, if the user specifies wheat, sorghum and lucerne as the three crops; wheat is planted first, followed by sorghum, followed by lucerne, and then back to wheat again. In this situation, the minimum fallow length input is critical as it defines the length of fallows between crops. Building a set of parameters for a rotational system is often an iterative exercise with the user changing minimum fallow lengths until the desired rotation is achieved.

6.1.2 *Automatic planting dates*

PERFECT can also generate planting dates subject to user-defined criteria specifying:

- planting rainfall, expressed a cumulative amount of rainfall occurring over a specified number of days;
- soil water on the day of planting, expressed as a minimum soil water content to a user-specified depth along with the minimum and maximum water contents for the top soil horizon;
- a planting window (the possible range of planting dates for a particular crop); and
- a minimum length of fallow before a crop can be planted

PERFECT uses the following logic to trigger a planting operation. Each step must be satisfied for a planting to occur.

- Is the current simulation day in fallow?
- Is the current simulation date within a user-defined planting window?
- Is the current fallow length longer than the minimum specified by the user?
- Has the user-defined rainfall criteria been satisfied?
- Has the user-defined minimum soil water criteria been satisfied?
- Is the soil water content in the top soil horizon within the allowable range specified by the user?

For automatic planting, there is no assumed sequence of crops as in a rotational system. Planting

is purely opportunistic, with a planting occurring whenever the above planting conditions are satisfied.

6.2 Tillage operations

Tillage operations can occur by the user either specifying fixed tillage dates or by defining criteria for a tillage to occur. A fixed tillage date assumes that the tillage will occur on the same day during each year of the simulation if it occurs during a fallow period.

Tillage dates can be generated subject to user-defined criteria specifying tillage rainfall and a tillage window. The first tillage after a harvest will be designated a primary tillage. All subsequent tillages are secondary tillages. A primary tillage rainfall and a secondary tillage rainfall are expressed a cumulative amount over rainfall occurring over a specified number of days.

PERFECT uses the following logic to trigger a tillage operation. Each step must be satisfied for a planting to occur.

1. Is the model in fallow?
2. Is the current simulation date within a user-defined tillage window?
3. Has the user-defined tillage criteria (minimum rainfall over a specified number of days) been satisfied?

Unlike crop codes, the one character codes used to specify a tillage implement are fixed. These are:

- B (burn stubble);
- D (disc plough);
- C (chisel plough);
- L (blade plough);
- R (rod weeder);
- S (scarifier);
- W (sweep plough); and
- Z (herbicide).

6.3 In-Crop Irrigation

Irrigation during a crop phase can be triggered based on either a user-defined and fixed daily amount (applied on every day in the simulation) or by irrigating on a user-defined soil water deficit, where sufficient water is applied to bring the soil to field capacity. Runoff from irrigation may occur for larger amounts of irrigation.

6.4 Updating soil water

For fixed planting dates, the user can optionally update soil water at planting to a specified percentage of field capacity.

6.5 User defined management options

All management options (planting, tillage, irrigation, updating soil water and updating crop residue weight) can be specified within a management sequence file. This file replaces all fixed and automatic planting, tillage and updating of soil water rules. The actual dates of each management option must be included in this file.

7.0 Running PERFECT

This section provides information on the data required to use PERFECT, and possible sources of those data. The format and specifications of all input files is provided in Appendix A.

PERFECT can be run in two mode:

- MS-DOS command line version. To run: : P30 < {control file name}
- PERFED Version 3.0 Windows interface

7.1 Data requirements of PERFECT

PERFECT requires:

- daily rainfall, pan evaporation, temperature and solar radiation data;
- parameters that describe the storage and movement of water in the soil;
- cropping sequence criteria (crop type and length of fallow);
- parameters that describe crop growth; and
- fallow management (tillage) options.

A soil profile is represented by up to ten soil horizons of variable thickness. Moisture contents for each horizon at air dry, lower limit, upper limit and saturation are required. Lower limit can also be referred to as the wilting point of the soil; that is, the moisture content at which plants become permanently wilted. Upper limit is analogous to the field capacity of a soil; that is, the soil moisture content at which drainage of water through the soil is becomes negligible. The saturated water content is simply the moisture content of a saturated soil. Additional parameters describing runoff, infiltration, drainage characteristics, evaporation of water from the soil surface, topography and soil erodibility are also needed.

Crop sequence parameters are required to specify the cropping system. PERFECT can generate dates of planting on the basis of the following criteria;

- minimum planting rainfall and the number of days over which it occurs (e.g. 30mm over 5 days);
- minimum soil water on the day of planting, expressed as a soil water content to a user-specified depth;
- minimum and maximum water contents for the top soil horizon;
- a planting window (the possible range of planting dates for a particular crop); and
- a minimum length of fallow before a crop can be planted.

Alternatively, the model user can input specific dates of planting

The type and frequency of tillage operations determines fallow management. Tillage operations or herbicide applications are generated by the model when conditions are favourable for weed growth. Amount of rainfall is used to determine favourable conditions for weed growth.

The complexity of the required crop parameters depends on which crop model is being used. For the dynamic wheat (Section 3.3) and sunflower (Section 3.4) models, the user can largely assume that the default parameter sets are adequate for subtropical Australia. For these models, the only crop growth parameters that require specification are a variety code and establishment density.

For the crop factor model (Section 3.1), the user must specify:

- annual distribution of transpiring cover;
- crop factor;
- maximum root depth and daily root growth;
- water use efficiency to produce biomass and a harvest index to harvest biomass; and
- number of days over which the crop will grow.

For the generic LAI model (Section 3.2), the user must specify:

- Leaf growth parameters – maximum LAI, a senesence coefficient, and two data points during LAI development;
- Growth degree days for physiological maturity and the proportion of the growing season at which the maximum LAI occurs;
- radiation use efficiency;
- maximum root depth and daily root growth;
- minimum and optimum temperatures for plant growth; and
- harvest index.

7.2 Data sources

7.2.1 Weather data

A major issue is the requirement for a complete record of daily weather data. Extreme problems can be faced with daily rainfall, which are the most readily available weather data. In Australia, most rainfall data are available through the Bureau of Meteorology but less than 5% of long-term records are complete. Problems with missing data means that datasets must be patched or reconstructed which can be a time consuming task. The availability of data rapidly reduces for weather data other than rainfall.

Within Australia, weather data can be obtained from a range of sources. Some examples are:
- Bureau of Meteorology (e.g. SILO website);
- CSIRO MetAccess CD;
- websites for the Queensland Centre for Climate Applications, Queensland Department of Natural Resources; and
- research groups who undertake simulation modelling often have their own databases.

7.2.2 Soil parameters

PERFECT requires a range of parameters that the functional properties of a soil. They can be obtained from a number of sources as shown in Table 7.1.

Table 7.1 Sources of soil parameters for PERFECT

Source of data	Reliability and confidence in model parameters
Calibration against field data;	Highest confidence
Strategic field measurement (e.g. measuring soil water through time, rainfall simulation and lysimeter studies);	
Surrogate models to estimate parameters from commonly available data (e.g. soil survey data);	
Inferring values from known similar soils	
Intelligent guesses.	Lowest confidence

Methods for measuring many of the soil physical inputs for models such as PERFECT have been described in a Australian Collaboration Land Evaluation Program Handbook (Coughlan *et al*. 1995) and will not be repeated here. Instead, the remainder of this chapter will describe some surrogate models developed to obtain model inputs for PERFECT in subtropical Australia.

Commonly available soil survey data often describes soil in a pedological sense and consists of a combination of field descriptions (e.g. colour, texture, depth, structure, field pH and field electrical conductivity) and laboratory analytical data (e.g. particle size distributions, moisture characteristics, pH, electrical conductivity and exchangeable cations). However, model parameters describe a soil in a functional sense. For example, infiltration rates, water holding characteristics, soil hydraulic properties and soil erodibility. Bouma (1989) stated that "A major challenge for soil science is to translate the data *we have* to data *we need".*

Moisture content at wilting point and field capacity

Littleboy (1998) describes a series of techniques to estimate soil parameters for PERFECT. These are summarised below. The wilting point (lower limit) and field capacity (upper limit) can be estimated using the following equations:

$$UL = (0.995 + 0.0011\,SAND)\,13.2\,e^{(-2.845\,D)} + (1.0054 + 0.0041\,CLAY)(-15bar) \qquad 7.1$$

$$LL = 100.0\,(-2.41 + 0.0566\,CLAY)(-0.0176 + 0.022\,D) + 1.0054(-15bar) \qquad 7.2$$

UL is the estimated gravimetric upper limit (%)
LL is the estimated gravimetric lower limit (%)
D is the depth of soil profile layer (m)
-15 *bar* is the gravimetric soil water content at -15 bar matric potential (%)
CLAY is the clay content of soil (%)
SAND is the sand content of soil (%).

These equations were developed from regression analyses of PAWC. Root mean square error (RMSE) for model prediction was 3.5% for both upper and lower limit. When this model was tested on an independent dataset (Gardner and Bauman, unpublished data), values of RMSE were 3.3%V for upper limit, 2.6%V for lower limit and 29mm for total PAWC.

Moisture content at air-dry

If measured moisture content at air-dry is not available, it can be estimated using a relationship reported by Shaw (1994):

$$ADMC = 0.59 + CLAY^{1.5} \qquad 7.3$$

ADMC is the gravimetric air-dry moisture content (%)
CLAY is the clay content of soil (%)

Moisture content at saturation

A technique to estimate soil water content at saturation (*SAT*) was undertaken by analysing data contained in Forrest *et al*. (1985). These authors reported measured values of *SAT* for a range of different soils in wheat growing areas of eastern Australia. The derived equation to estimate *SAT* from Littleboy (1998) is:

$$\theta_s = \min\left(0.97, (0.815 + 0.00282\,CLAY)\right).\left(1.0 - \frac{\rho_b}{2.65}\right).100 \qquad 7.4$$

θ_s is the volumetric water content at saturation (%)
ρ_b is wet bulk density (g cm^{-3})
CLAY is the clay content of soil (%)

Bulk density

The bulk density of the soil (used to convert moisture contents from gravimetric to volumetric) can be estimated using Equation 7.5.

$$\rho_b = \frac{85.82 + 0.12\,\mathrm{CLAY}}{\theta_{max} + 37.74} \qquad \text{if } \rho_b > 1.7\text{, then } \rho_b = 1.7 \qquad 7.5$$

ρ_b is the soil bulk density (g cm^{-3})
CLAY is the clay content of the soil (%)
θ_{max} is gravimetric water content at the upper limit (%)

Equation 7.5 was empirically derived from the Forrest *et a*l. (1985) data and is underpinned by the general relationship between bulk density and water content, *viz*:

$$\rho_b = \frac{100 - \varepsilon}{\theta_g + \frac{100}{\rho_m}} \qquad 7.6$$

ρ_b is the soil bulk density (g/cm^3)
ε is the volume of air in the soil at a water content of θg (%)
θ_g is gravimetric water content (%)
ρ_m is the mineral density of soil particles (assumed to equal 2.65 g/cm^3)

Runoff curve number

The runoff curve number in PERFECT partitions rainfall into runoff and infiltration according to the value of USDA runoff curve number (*CN*). In Queensland, values of *CN* for a range of soils have been calculated from model calibration using measured runoff data or rainfall simulator data (Littleboy *et al.*, 1992a; Glanville *et al.,* 1984; Thomas *et al.*, 1995). Appropriate values of *CN* for these soils have been developed based on these measured values of *CN*. Some examples are a *CN* of 75 for a self-mulching soil, 80 for a firm-setting soil, 85 for a hard-setting soil and 90 for a very hard-setting soil.

MUSLE soil erodibility (K factor)

An accepted method for estimating the soil erodibility factor (*K*) of the Universal Soil Loss Equation (USLE) and the Revised USLE is the nomograph (Wischmeier *et al.*, 1971). There are some concerns on the applicability of the nomograph for the modified USLE (MUSLE) applied in this study. For the USLE, *K* incorporates both runoff generation and sediment transport processes but a MUSLE explicitly includes runoff in the equation. Therefore, MUSLE *K* should only include sediment transport processes (Loch, pers comm). Since a nomograph for the MUSLE *K* does not exist, the original USLE nomograph is assumed to be the most appropriate method to determine *K* for a MUSLE.

Loch and Rosewell (1992) compared measured and estimated USLE *K* and reported that the nomograph under-estimated *K*. They suggested modifications to the nomograph to include non-dispersive methods of particle size determination. Since non-dispersed particle size data are generally unavailable, a modified form of the nomograph with an adjustment for sediment density reported by Loch and Rosewell (1992) and Rosewell and Loch (1996) is recommended.

$$K_{new} = \frac{K_{nomograph}}{DS - 1.0} \qquad 7.7$$

$$DS = 1.4621 + 0.048\,(1.03259^{SAND}) \qquad 7.8$$

K is the MUSLE K factor adjusted for sediment density
$K_{nomograph}$ is the USLE K factor from original nomograph
DS is the sediment density factor from Loch and Rosewell (1992)
SAND is the sand content of the topsoil (%)

A recent publication by Loch *et al*. (1999) provides an alternative approach to obtain values of the MUSLE K factor.

Soil evaporation parameters, *CONA* and *U*

CONA and U can be estimated from clay content using a modified form of the procedure described by Ritchie and Crum (1989). Recommended values for CONA and U are presented in Table 7.2. Alternatively, CONA and U can be calculated directly from lysimeter data if available (cf Ritchie 1972).

Table 7.2 **Soil evaporation parameters CONA and U expressed as a function of Clay content**

Clay (%)	CONA	U
10	3.5	6.75
20	3.75	8.5
30	4.0	9.0
40	4.0	9.5
50	4.0	9.0
60	3.75	8.25
70	3.5	7.5
80	3.5	7.0

References

Abbs, K.T. 1994. Water balance modellings and its application to the Liverpool Plains, NSW. Proceedings, Australian Society of Soil Science Incorporated, Tamworth Workshop, 10-11 March 1994.

Abbs, K. and Littleboy, M. (1998). Recharge estimation for the Liverpool Plains. Australian Journal of Soil Research **36(2)**:335-357.

Adams, J.E., Arkin, G.F. and Ritchie, J.T. (1976). Influence of row spacing and straw mulch on first stage drying. *Soil Science Society of America Journal*, **40**, 436-442.

Bouma, J. (1989). Using soil survey data for quantitative land evaluation. *Advances in Soil Science* **9**, 177-213.

Carroll C., Littleboy M. and Halpin M. (1992). Minimising soil erosion and runoff by maximising cropping opportunities. *Mathematics and Computers in Simulation* **33**: 427-432.

Cogle A.L., Littleboy M., Rao K.P.C., Smith G.D., and Yule D.F. (1996). Soil management and production of Alfisols in the semi-arid tropics. III Long term effects on water conservation and production. *Australian Journal of Soil Research* **34**:113-126.

Coughlan, K.J., McKenzie, N.J., McDonald, W.S. and Cresswell, H.P. D.E. (1995). Soil Physical Measurement and Interpretation for Land Evaluation. Australian Soil and Land Survey Handbook Series Volume 5. Australian Collaborative Land Evaluation Program, CSIRO, Canberra.

Doorenbos, J. and Pruitt, W.O. (1977). Guidelines for predicting crop water requirements. FAI Irrigation and Drainage Paper No. 24. FAO, Rome.

Fischer, R.A. (1979). Growth and water limitation to dryland wheat in Australia: a physiological approach. *Journal Australian Institution of Agricultural Science*, **45**, 83-94.

Forrest, J.A., Beatty, J., Hignett, C.T., Pickering, J. and Williams, R.G.P (1985). A survey of the physical properties of wheatland soils in Eastern Australia. *CSIRO Division of Soils Divisional Report* **78**.

Freebairn, D.M., Silburn, D.M., Hammer, G.L. and Woodruff, D.R. (1986). Surface management and stability of production in cropping systems, Development of a model to simulate erosion and crop yield. Final report, Queensland Department of primary Industries New Initiatives Program.

Freebairn, D.M. and Wockner, G.H. (1986). A study of soil erosion on Vertisols of the eastern Darling Downs, Queensland. II The effect of soil, rainfall and flow conditions on suspended sediment losses. *Australian Journal of Soil Research*, **24**, 159-172.

Freebairn, D.M., Silburn, D.M. & Loch, R.J. 1989. Evaluation of three soil erosion models for clay soils.

Freebairn, D.M. and Gupta, S.C. (1990). Microrelief, rainfall and cover effects on infiltration. *Soil and Tillage Research* **16**, 307-327.

Freebairn D.M., Littleboy M., Smith G.D. and Coughlan K.J. (1991). Optimising agronomic practice in response to climate risk: soil surface management. International Climatic Risk in Agriculture Symposium, 2-6 July 1990, University of Queensland.

Gardner E.A., Littleboy M. and Beavers P. (1995). Using a water balance model to assess the hydrological implications of on-site effluent disposal. 16th Federal Convention of the Australian Water and Waste Water Association, April 1995, Sydney, Australia.

Glanville, S.G., Freebairn, D.M. and Silburn, D.M. (1984). Using curve numbers from simulated rainfall to describe the runoff characteristics of contour bay catchments. *Conference on Agricultural Engineering*, Bundaberg, Queensland, 27-30 August 1984. (Institution of Engineers, Australia).

Grundy, M.J., Littleboy, M. and Heiner, I.J. (1992). Improving land evaluation: A case study of the use of an agricultural systems model with land resource survey. *AURISA 1992 Conference*, 25-27 November 1992, pp. 281-290.

Hammer, G.L. and Goyne, P.J. (1982) Determination of regional strategies for sunflower production. *Proceedings 10th International Sunflower Conference*, Surfers Paradise, March 14-18, 1982, pp. 48-52.

Hammer, G.L., Goyne, P.J. and Woodruff, D.R. (1982). Phenology of sunflower cultivars. III Models for prediction in field environments. *Australian Journal of Agricultural Research*, **33**, 263-274.

Hammer, G.L., Woodruff, D.R. and Robinson, J.B. (1987). Effects of climatic variability and possible climatic change on reliability of wheat cropping - A modelling approach. *Agricultural and Forest Meteorology*, **41**, 123-142.

Hayman, P.T. 1992. Using 100 years of Gunnedah rainfall data to investigate the role of pasture in reducing water table recharge. proceedings Grassland Society of NSW, 7th Annual Conference, Tamworth 8-9 July 1992.

Hayman, P.T. and Kneipp, J. 1995. Opportunity cropping - A matter of definition. Proceedings Making Catchment Management Happen - Liverpool Plains Land Management Committee, Gunnedah, 20 May - 1 June 1995.

Jones, C.A. and Kiniry, J.R. (1986). CERES-MAIZE: A simulation model of maize growth and development. (A&M University Press, Texas).

Knisel, W.G. (1980). CREAMS: A Field-Scale Model for Chemicals, Runoff and Erosion from Agricultural Management Systems. United States Department of Agriculture, Conservation Research Report 26, 640 pp.

Lawrence P.A. and Littleboy M. 1990. Evaluating sustainable farming systems in Central Queensland. 5th Australian Soil Conservation Conference, March 1990, Perth.

Littleboy, M., Silburn, D.M., Freebairn, D.M., Woodruff, D.R. and Hammer, G.L. (1989). PERFECT, A computer simulation model of Productivity, Erosion, Runoff Functions to Evaluate Conservation Techniques. *Queensland Department of Primary Industries, Bulletin* **QB89005**.

Littleboy, M., Silburn, D.M., Freebairn, D.M., Woodruff, D.R., Hammer, G.L. and Leslie, J.K. (1992a). Impact of soil erosion on production in cropping systems. , I. Development and validation of a simulation model. *Australian Journal of Soil Research*, **30**,757-774.

Littleboy M., Freebairn D.M. and Hammer G.L. (1992b). Impact of soil erosion on production in cropping systems. II Simulation of production and erosion risks for a wheat cropping system. *Australian Journal of Soil Research*, **30(5)**:775-788.

Littleboy, M., Cogle, A.L., Smith, G.D., Yule, D.F. and Rao, K.P.C. (1996a). Soil management and production of Alfisols in the semi-arid tropics. I Modelling the effects of soil management on runoff and erosion. *Australian Journal of Soil Research*, **34**, 91-102.

Littleboy M., Sachan R.C., Smith G.D. and Cogle A.L. (1996b). Soil management and production of Alfisols in the semi-arid tropics. II Deriving USDA curve numbers from rainfall simulator data. *Australian Journal of Soil Research* **34**:103-112.

Littleboy M., Cogle A.L., Smith G.D., Yule D.F. and Rao K.P.C. (1996c). Soil management and production of Alfisols in the semi-arid tropics. IV Simulating decline in productivity caused by soil erosion. *Australian Journal of Soil Research* **34**:127-138.

Littleboy M., Smith D.M. and Bryant M. (1996d). Simulation modelling to determine suitability of agricultural land. *Ecological Modelling* **86**: 219-225.

Littleboy, M. (1998). Spatial generalisation of biophysical simulation models for quantitative land evaluation: A case study for dryland wheat growing areas of Queensland. PhD Thesis. The University of Queensland.

Littleboy, M., McGarry, D. and Bray, S. (1998). A combination of modelling and soil data to determine risk of soil compaction. Proceedings, National Soils Conference, Brisbane, pp 462-465. Australian Society of Soil Science Incorporated.

Loch, R.J. and Rosewell, C.J. (1992). Laboratory methods for measurement of soil erodibilities (K factors) for the universal soil loss equation. *Australian Journal of Soil Research,* **30**,233-248.

Loch, R.J., Slater, B.K. and Devoil, C. (1999). Soil erodibility (Km) for some Australian soils. *Australian Journal of Soil Research,* **36**.

McCown, R.L., Hammer, G.L., Hargreaves, J.N.G., Holzworth, D.P. and Freebairn, D.M. (1996). APSIM: A novel software system for model development, model testing, and simulation in agricultural systems research. *Agricultural Systems*, **50**, 255-271.

Onstad, C.A., and Foster, G.R. (1975). Erosion modelling on a watershed. *Transactions, American Society of Agricultural Engineers* **18**, 288-292.

Rawls, W.J., Onstad, C.A. and Richardson, H.H. (1980). Residue and tillage effects on SCS runoff curve numbers. In, W.G. Knisel (ed.), CREAMS: A Field-Scale Model for Chemicals, Runoff and Erosion from Agricultural Management Systems. United States Department of Agriculture, Conservation Research Report 26, pp. 405-425.

Renard, K.G., Foster, G.R., Weesies, G.A., McCool, D.K. and Yoder, D.C. (1993). Predicting soil erosion by water: A guide to conservation planning with the Revised Universal Soil Loss Equation (RUSLE). Agricultural Handbook 703, United States Department of Agriculture.

Rickert, K.G. and McKeon, G.M. 1982. Soil water balance model: WATSUP. Proceedings Australian Society of Animal Production 14, 198-200.

Ritchie, J.T. (1972). A model for predicting evaporation from a row crop with incomplete cover. *Water Resources Research*, **8**, 1204-1213.

Ritchie, J. T. and Crum, J. (1989). Converting soil survey characterisation data into IBSNAT crop model input. In, Land Qualities in Space and Time. Proceedings of a Symposium organised by the International Society of Soil Science, Wageningen, The Netherlands, Pudoc, Wageningen. pp. 155-

68.

Rose, C.W. (1985). Developments in soil erosion and deposition models. *Advances in Soil Science* **2**, 1-63.

Rosenthal, W.D., Vanderlip, R.L., Jackson, B.S., and Arkin, G.F. (1989). SORKAM: A Grain Sorghum Crop Growth Model. Texas Agricultural Experimental Station Computer Software Documentation Series, MP1669, Texas A & M University, Texas.

Rosewell, C.J. and Edwards, K. (1988). SOILOSS - a program to assist in the selection of management practices to reduce erosion. Soil Conservation Service of New South Wales, Technical Handbook Number 11.

Rosewell, C.J. and Loch, R.J. (1995). Soil Erodibility - Water. In, Soil Physical Measurement and Interpretation for Land Evaluation. Australian Soil and Land Survey Handbook Series Volume 5. Australian Collaborative Land Evaluation Program, CSIRO, Canberra.

Sallaway, M.M., Lawson, D. and Yule, D.F. (1989). Ground cover during fallow from wheat, sorghum and sunflower stubble under three tillage practices in Central Queensland. *Soil and Tillage Research*, **12**, 347-364.

Shaw, R.J. (1994). Estimation of the electrical conductivity of saturation extracts from the electrical conductivity of 1:5 soil:water suspensions and various soil properties. *Queensland Department of Primary Industries Project Report* **QO94025**.

Silburn, D.M. & Freebairn, D.M. 1992. Evaluations of the CREAMS Model. III Simulation of the hydrology of vertisols, *Australian Journal of Soil Research* **30**, 547-564.

Thomas E.C., Gardner E.A., Littleboy M. and Shields P.J. (1995). The cropping systems model PERFECT as a quantitative tool in land evaluation: An example for wheat cropping in the Maranoa area of Queensland. *Australian Journal of Soil Research* **33**:535-554.

United States Department of Agriculture, Soil Conservation Service (1972). National Engineering handbook, Section 4, Hydrology, United States Department of Agriculture.

Williams, J.R. (1976). Sediment-yield prediction with universal equation using runoff energy factor. In, 'Present and Prospective Technology for Predicting Sediment Yields and Sources.' pp. 244-52. United States Department of Agriculture, ARS-S-40.

Williams, J.R. and La Seur, W.V. (1976). Water yield model using SCS curve numbers. *Journal of Hydraulics Division, American Society of Civil Engineers*, **102**, 1241-1253.

Williams, J.R. (1983). EPIC, The Erosion-Productivity Impact Calculator, Volume 1. Model Documentation, Agricultural Research Service, United States Department of Agriculture.

Williams, J.R., Nicks, A.D. and Arnold, J.G. (1985). Simulator for Water Resources in Rural Basins. *Journal of Hydraulic Engineering*, **111**, 970-986.

Williams J., Bui E., Gardner E.A., Littleboy M. and Probert M. (1997). Tree clearing and dryland salinity hazard in the upper burdekin catchment of north Queensland. *Australian Journal of Soil Research* **35**:785-801.

Wischmeier, W.H., Johnson, C.B. and Cross (1971). A soil erodibility nomograph for farmland and construction sites. *Journal or Soil and Water Conservation,* **26**, 189-93.

Woodruff, D.R. and Tonks, J. (1983). Relationship between time of anthesis and grain yield of wheat genotypes with differing developmental patterns. *Australian Journal of Agricultural Research*, **34**, 1-11.

Appendix A Description of model input files

With the exception of the weather data file, all input files into PERFECT are free formatted. Values can be separated by either a comma or a space. Files contain internal headers to facilitate the viewing and editing of files using a text editor.

A.1 Control file

This file contains the necessary "control" information for PERFECT.

Line 1:	Reserved for internal header
Line 2:	Day, month and year for the first simulation day (space or comma delimited)
Line 3:	Day, month and year for the last simulation day (space or comma delimited)
Line 4:	Reserved for internal header
Line 5:	(Y/N) switch for the creation of an daily output file
Line 6:	Reserved for internal header
Line 7:	File name of the weather data file
Line 8:	File name of the soil parameter file
Line 9:	File name of the manager file
Line 10:	File name of the optional management sequence file
Line 11:	File name of the initial values file

A.2 Weather data

This file contains daily weather data. PERFECT assumes that this file is complete in that it does not contain missing data for any day, nor missing days (e.g. leap years must be correct). Each data record is formatted using the FORTRAN statement (1X,I4,2I2,I5,5f6.1). This is the only input file into PERFECT that is fixed format. This format is compatible to that used by the GRASP pasture production model developed by the Queensland Departments of Primary Industries and Natural Resources.

Line 1:	latitude (decimal degrees)
Lines 2+:	Year, month, day, Julian day number, maximum temperature (^oC), Minimum temperature (^oC), rainfall (mm), pan evaporation (mm) and radiation (MJ m^{-2} day^{-1})

A.3 Soil parameters

This file contains parameters that describe the physical properties of the soil.

Line 1:	User defined alphanumeric title (output to PERFECT.OUT)
Line 2:	Reserved for internal header
Line 3:	Number of soil profile layers (Maximum of 10, but 3-5 recommended)
Line 4:	Reserved for internal header
Line 5:	Reserved for internal header
Line 6:	Reserved for internal header
Line 7:	Reserved for internal header
Line 8:	Depth at bottom of the first soil profile layer (mm), volumetric water contents (%) at air-dry, wilting point, field capacity and saturation, and saturated hydraulic conductivity (mm/hr).
Line 9:	Depth at bottom of the second soil profile layer (mm), volumetric water contents (%) at air-dry, wilting point, field capacity and saturation, and saturated hydraulic conductivity (mm/hr).
Line 10:	Depth at bottom of the third soil profile layer (mm), volumetric water contents (%) at air-dry, wilting point, field capacity and saturation, and saturated hydraulic conductivity (mm/hr).
Line 11:	Reserved for internal header
Line 12:	Stage II soil evaporation parameter, *CONA*

Line 13: Upper limit of Stage I soil evaporation (mm)
Line 14: Runoff curve number for average antecedent moisture conditions and bare soil, *CN*2(*bare*)
Line 15: Reduction in curve number at 100% cover
Line 16: Maximum reduction in curve number due to surface roughness
Line 17: Cumulative rainfall required to remove surface roughness
Line 18: Modified USLE soil erodibility factor, *K*
Line 19: Modified USLE management practice factor, *P*
Line 20: Field slope (%)
Line 21: Slope-length or contour bank spacing (m)
Line 22: Revised USLE rill/interill ratio factor
Line 23: Bulk density of the top profile layer
Line 24: Soil cracking option (Y/N)
Line 25: Maximum infiltration into soil cracks (mm)

The above list assumes that the number of profile layers (defined line 3) is 3, resulting in 3 lines of soil profile information (lines 8, 9 and 10). Each additional soil profile layer will add one new line to the length of this file.

A.4 Manager parameters

This file contains the necessary information to define the cropping system, tillage practices and irrigation scheduling. There are a number of general concepts behind the management inputs:

- Two character alphanumeric codes that are used to identify crop types are defined by the user. PERFECT reads the crop code (e.g. XY) and will open a corresponding crop parameter file called XY.crp. Therefore, these two character codes are simply pointers to crop parameter files. PERFECT V3.0 is supplied with a number of “default” crop parameter files.
- Unlike crop codes, the one character codes used to specify a tillage implement are fixed. These are B (burn stubble), D (disc plough), C (chisel plough), L (blade plough), R (rod weeder), S (scarifier), W (sweep plough) and Z (herbicide).

Line 1: User defined alphanumeric title (Output to PERFECT.OUT)
Line 2: Reserved for internal header
Line 3: Reserved for internal header
Line 4: Optional daily irrigation (mm) (zero for no fixed irrigation)
Line 5: Optional soil water deficit (mm) to irrigate to field capacity (zero for no automatic irrigation)
Line 6: Reserved for internal header
Line 7: Reserved for internal header
Line 8: Y/N flag; automatically plant crops subject to planting criteria
Line 9: For Y on line 8; number of crops to be considered (maximum of three)
Line 10: For Y on line 8; crop code and variety ID for first crop
Line 11: For Y on line 8; crop code and variety ID for second crop
Line 12: For Y on line 8; crop code and variety ID for third crop
Line 13: For Y on line 8; planting rainfall (mm) for each crop (maximum of 3 comma or space delimited numbers)
Line 14: For Y on line 8; days to accumulate planting rainfall (maximum of 3 comma or space delimited numbers)
Line 15: For Y on line 8; minimum available soil water (mm) on day of planting (maximum of 3 comma or space delimited numbers)
Line 16: For Y on line 8; soil depth (mm) to sum planting soil water (maximum of 3 comma or space delimited numbers)
Line 17: For Y on line 8; minimum soil water ratio 0-10cm to plant crop (maximum of 3 comma or space delimited numbers)
Line 18: For Y on line 8; maximum soil water ratio 0-10cm to plant crop (maximum of 3

	comma or space delimited numbers)
Line 19:	For Y on line 8; Julian day number for start of planting window for each crop (maximum of 3 comma or space delimited numbers)
Line 20:	For Y on line 8; Julian day number for end of planting window for each crop (maximum of 3 comma or space delimited numbers)
Line 21	For Y on line 8; minimum length of preceding fallow (days) (maximum of 3 comma or space delimited numbers)
Line 22:	Reserved for internal header
Line 23:	Reserved for internal header
Line 24:	Y/N flag; plant crops on fixed dates each year
Line 25:	For Y on line 24; number of crops to be considered (maximum of three)
Line 26:	For Y on line 24; Crop code and variety ID for first crop
Line 27:	For Y on line 24; Crop code and variety ID for second crop
Line 28:	For Y on line 24; Crop code and variety ID for third crop
Line 29:	For Y on line 24; Planting date for first crop (day & month, comma or space delimited)
Line 30:	For Y on line 24; Planting date for second crop (day & month, comma or space delimited)
Line 31:	For Y on line 24; Planting date for third crop (day & month, comma or space delimited)
Line 32	For Y on line 24; minimum length of preceding fallow (days) (maximum of 3 comma or space delimited numbers)
Line 33	For Y on line 24; Y/N flag to update soil water at planting
Line 34:	For Y on lines 24 and 33; Available water (%) update soil water at planting
Line 35:	Reserved for internal header
Line 36:	Reserved for internal header
Line 37:	Y/N flag; automatically till subject to tillage criteria
Line 38:	For Y on line 37; Primary tillage implement
Line 39:	For Y on line 37; Secondary tillage Implement
Line 40:	For Y on line 37; Accumulated rainfall (mm) for primary tillage
Line 41:	For Y on line 37; Accumulated rainfall (mm) for secondary tillage
Line 42:	For Y on line 37; Number of days to accumulate tillage rainfall
Line 43:	For Y on line 37; Minimum number of days since previous tillage
Line 44:	For Y on line 37; Julian day number for start of tillage window
Line 45:	For Y on line 37; Julian day number for end of tillage window
Line 46:	Reserved for internal header
Line 47:	Reserved for internal header
Line 48:	Y/N flag; perform tillages on fixed dates each year
Line 49:	For Y on line 48; Primary tillage implement
Line 50:	For Y on line 48; Secondary tillage Implement
Line 51:	For Y on line 48; Number of tillages per fallow (Maximum of 4)
Line 52:	For Y on line 48; Date of first tillage with primary implement (day & month, comma or space delimited)
Line 53:	For Y on line 48; Date of second tillage with secondary implement (day & month, comma or space delimited)
Line 54:	For Y on line 48; Date of third tillage with secondary implement (day & month, comma or space delimited)
Line 55:	For Y on line 48; Date of fourth tillage with secondary implement (day & month, comma or space delimited)
Line 56:	Reserved for internal header
Line 57:	Reserved for internal header
Line 58:	Y/N flag; to read specific planting and tillage dates from sequence file
Line 59:	Reserved for internal header
Line 60:	Reserved for internal header

Line 61: Y/N flag to all for crop death due to extreme water stress

A.5 Crop parameters - crop factor model

This file contains the parameters for the crop factor model described in Section 3.1. The internal flag on line 2 of this file is critical as it specifies which crop model to use within PERFECT. Lines 3 to 8 of this file are not actually used by PERFECT. They are only included for access by the PERFED front-end software to facilitate the building of new manager files.

Line 1: Alphanumeric title
Line 2: Internal flag for PERFECT. Must equal 4 for this file
Line 3: Default "fixed" planting date (accessed by PERFED 3.0 only)
Line 4: Default planting rainfall (mm) over and number of days to sum rainfall (accessed by PERFED 3.0 only)
Line 5: Default minimum soil water at planting (mm) and depth (m) to sum soil water (accessed by PERFED 3.0 only)
Line 6: Default minimum & maximum soil water 0-10cm (0-1) (accessed by PERFED 3.0 only)
Line 7: Julian dates of start and end of default planting window (accessed by PERFED 3.0 only)
Line 8: Default minimum length of preceding fallow (days) (accessed by PERFED 3.0 only)
Line 9: Crop factor (ranges from 0.0 to 1.0)
Line 10: Water use efficiency (g m^{-2} mm^{-1})
Line 11: Harvest index (ranges from 0.0 to 1.0)
Line 12: Number of days from crop planting to harvest
Line 13: Maximum residue cover (0.0 to 1.0 range) for this crop type
Line 14: Daily root growth (mm)
Line 15: Maximum root depth (mm)
Line 16: Reserved for internal header
Line 17: Reserved for internal header
Line 18: Reserved for internal header

The remainder of this file contains pairs of "Julian day number" and "crop cover (%)"; one pair of values per line, delimited by either one or more spaces or a comma.

A.6 Crop parameters - generic crop model

This file contains the parameters for the generic crop model described in Section 3.2. The internal flag on line 2 of this file is critical as it specifies which crop model to use within PERFECT. Lines 3 to 8 of this file are not actually used by PERFECT. They are only included for access by the PERFED front-end software to facilitate the building of new manager files.

Line 1: Alphanumeric title
Line 2: Internal flag for PERFECT. Must equal 5 for this file
Line 3: Default "fixed" planting date (accessed by PERFED 3.0 only)
Line 4: Default planting rainfall (mm) over and number of days to sum rainfall (accessed by PERFED 3.0 only)
Line 5: Default minimum soil water at planting (mm) and depth (m) to sum soil water (accessed by PERFED 3.0 only)
Line 6: Default minimum & maximum soil water 0-10cm (0-1) (accessed by PERFED 3.0 only)
Line 7: Julian dates of start and end of default planting window (accessed by PERFED 3.0 only)
Line 8: Default minimum length of preceding fallow (days) (accessed by PERFED 3.0 only)
Line 9: Potential maximum leaf area index (cm^2/cm^2)
Line 10: Total degree days ^oC from planting to harvest

Line 11: Proportion of growing season for maximum LAI
Line 12: First point on LAI development curve; proportion of maximum LAI
Line 13: First point on LAI development curve; Proportion of growing season
Line 14: Second point on LAI development curve; Proportion of maximum LAI
Line 15: Second point on LAI development curve; Proportion of growing season
Line 16: Senesence coefficient
Line 17: Radiation use efficiency (g/m^2 per MJ of intercepted radiation)
Line 18: Harvest index (range between 0.0-1.0)
Line 19: Base temperature for growth (^oC)
Line 20: Optimal temperature for plant growth (^oC)
Line 21: Maximum root depth (mm)
Line 22: Daily root growth (mm)
Line 23: Water stress index threshold for crop death
Line 24: Number of consecutive water stress days for crop kill
Line 25: Maximum Residue Cover (0-1)
Line 26: Y/N flag to ratoon crop
Line 27: For Y on line 26; number of ratoons to be simulated
Line 28: For Y on line 26; growth scaling factor (ranging from 0.0 to 1.0) to linearly scale growth for subsequent ratoons

A.7 Crop parameters - dynamic wheat model

This file contains the parameters for the generic crop model described in Section 3.4. The internal flag on line 2 of this file is critical as it specifies which crop model to use within PERFECT. Lines 3 to 8 of this file are not actually used by PERFECT. They are only included for access by the PERFED front-end software to facilitate the building of new manager files. This crop parameter file is more complex than those described in Sections A.5, A.6 and A.8 because the wheat model has more functionality than the other crop models in PERFECT.

Line 1: Alphanumeric title
Line 2: Internal flag for PERFECT. Must equal 1 for this file
Line 3: Default "fixed" planting date (accessed by PERFED 3.0 only)
Line 4: Default planting rainfall (mm) over and number of days to sum rainfall (accessed by PERFED 3.0 only)
Line 5: Default minimum soil water at planting (mm) and depth (m) to sum soil water (accessed by PERFED 3.0 only)
Line 6: Default minimum & maximum soil water 0-10cm (0-1) (accessed by PERFED 3.0 only)
Line 7: Julian dates of start and end of default planting window (accessed by PERFED 3.0 only)
Line 8: Default minimum length of preceding fallow (days) (accessed by PERFED 3.0 only)
Line 9: Reserved for internal header
Line 10: Y/N flag; simulate phenology based on fixed number of days to anthesis
Line 11: Degree days - planting to emergence
Line 12: Number of days - planting to anthesis
Line 13: Degree days - anthesis to harvest
Line 14: Reserved for internal header
Line 15: Y/N flag; simulate phenology based degree days
Line 16: Degree days - planting to emergence
Line 17: Degree days - anthesis to harvest
Line 18: Number of planting day, degree day pairs for variety #1
Line 19: Day number for variety #1, repeated for the number specified on line 18 (space or comma delimited)
Line 20: Degree days (emergence to anthesis) for variety #1, repeated for the number

specified on line 18 (space or comma delimited)

Line 21: Number of planting day, degree day pairs for variety #2

Line 22: Day number for variety #2, repeated for the number specified on line 18 (space or comma delimited)

Line 23: Degree days (emergence to anthesis) for variety #2, repeated for the number specified on line 18 (space or comma delimited)

Line 24: Number of planting day, degree day pairs for variety #3

Line 25: Day number for variety #3, repeated for the number specified on line 18 (space or comma delimited)

Line 26: Degree days (emergence to anthesis) for variety #3, repeated for the number specified on line 18 (space or comma delimited)

Line 27: Reserved for internal header

Line 28: Y/N flag; determine phenology using the full phenology equation

Line 29: Degree days - planting to emergence

Line 30: Degree days - anthesis to harvest

Line 31: Reserved for internal header

Line 32: Base temperature (planting to emergence)

Line 33: Base temperature (emergence to anthesis)

Line 34: Base temperature (anthesis to harvest)

Line 35: Reserved for internal header

Line 36: Number data points to describe shoot growth vs phenology function

Line 37: Phenological stages for each point specified on line 36 (space or comma delimited)

Line 38: Shoot ratios for each point specified on line 36 (space or comma delimited)

Line 39: Reserved for internal header

Line 40: Number data points to describe growth vs temperature function

Line 41: Temperature (^oC) for each point specified on line 40 (space or comma delimited)

Line 42: Temperature index on growth (0-1) for each point specified on line 40 (space or comma delimited)

Line 43: Reserved for internal header

Line 44: Starting LAI (cm^2/cm^2)

Line 45: Starting dry matter (g/m^2)

Line 46: Starting root depth (mm)

Line 47: Daily root growth (mm)

Line 48: Maximum root depth (mm)

Line 49: Extinction Coefficient for relationship between LAI and transpiring cover

Line 50: Extinction Coefficient for relationship between LAI and total cover

Line 51: Reserved for internal header

Line 52: Water stress index threshold for crop death

Line 53: Number of consecutive water stress days for crop kill

Line 54: Reserved for internal header

Line 55: Maximum Residue Cover (0-1)

A.8 Crop parameters - dynamic sunflower model

This file contains the parameters for the generic crop model described in Section 3.4. The internal flag on line 2 of this file is critical as it specifies which crop model to use within PERFECT. Lines 3 to 8 of this file are not actually used by PERFECT. They are only included for access by the PERFED front-end software to facilitate the building of new manager files.

Line 1: Alphanumeric title

Line 2: Internal flag for PERFECT. Must equal 2 for this file

Line 3: Default "fixed" planting date (accessed by PERFED 3.0 only)

Line 4: Default planting rainfall (mm) over and number of days to sum rainfall (accessed by PERFED 3.0 only)
Line 5: Default minimum soil water at planting (mm) and depth (m) to sum soil water (accessed by PERFED 3.0 only)
Line 6: Default minimum & maximum soil water 0-10cm (0-1) (accessed by PERFED 3.0 only)
Line 7: Julian dates of start and end of default planting window (accessed by PERFED 3.0 only)
Line 8: Default minimum length of preceding fallow (days) (accessed by PERFED 3.0 only)
Line 9: Reserved for internal header
Line 10: Maximum root depth (mm)
Line 11: Reserved for internal header
Line 12: Water stress index threshold for crop death
Line 13: Number of consecutive days of extreme water stress for crop death
Line 14: Reserved for internal header
Line 15: Maximum residue cover (0-1)

A.9 Management sequence

This file allows the user to specify individual management operations into PERFECT. Each line contains one of the following types of records.

For planting:
Day, month, year, PLANT, Crop type, variety and population (Table A1)

For tillage:
Day, month, year, TILLAGE, tillage implement code (Table A2)

For irrigation:
Day, month, year, IRRIGATE, irrigation amount (mm)

For soil water update:
Day, month, year, SOILWATER, available soil water for each layer (mm)

For crop residue update:
Day, month, year, RESIDUE, crop residue (kg ha^{-1})

The file is in the same format as the management output file (see Appendix B). Therefore, the manager output file could be used as a template to create a similar management sequence file.

A.10 Initial values

This file contains the starting values for soil water and crop residue at the start of the simulation.

Line 1: Initial available soil water on day one of the simulation (proportion of field capacity)
Line 2: Initial crop residue (kg ha^{-1})

Appendix B Description of model output files

Summary output (perfect.out)

This file contains summary information on model inputs, average annual output and average monthly output.

Manager output (manager.out)

This file contains information on every management operation performed by PERFECT during the simulation. The file is in the same format as the management sequence file (see section A.9 in Appendix A). Therefore, this file could be renamed, modified, and used as an input file for a new simulation. This procedure is only available when running the model in MS-DOS mode.

Codes file (codes.txt)

This file defines the crop and tillage names for use with the optional comma separated values (CSV) files. Apart from the header records, the CSV files contain only numerical data. A crop ID and a tillage ID is output in many of these files to signify whether a crop is in the ground or a tillage operation has occurred. The codes.txt file identifies these ID codes. This file will change dependent on the cropping system selected by the user.

Comma separated values files

Each of these files are ASCII text files with data separated by commas. They are designed to be imported into graphical and spreadsheet software. Output can be on an annual, monthly, daily, end of crop, end of fallow, or average monthly basis. To save execution time, the daily output is optional (see section A.1 in Appendix A). Each comma separated values file contains alphanumeric headers (also comma separated) that identifies each column of output. The files names are:

DAILY.ASC: Optional daily output
MONTHLY.ASC: Monthly output (last day of the month)
ANNUAL.ASC: Annual output (on 31 December each year)
AVERAGE.ASC: Average monthly output
FALLOW.ASC: Output for fallow periods
CROP.ASC: Output for crop periods

For outputs at a monthly, annual, crop and fallow time scales, some variables are output as the total accumulated over the time period while others are output as instantaneous values on the day of output. Accumulated variables are rainfall, irrigation, runoff, soil evaporation, transpiration, drainage, erosion, temperature, pan evaporation and radiation. Instantaneous variables are crop cover, residue cover, soil water, leaf area index and crop dry matter.